NASA/CR-1999-209117

Fabrication and Assembly of High-Precision Hinge and Latch Joints for Deployable Optical Instruments

James E. Phelps
Nyma/ADF, Hampton, Virginia

August 1999

The NASA STI Program Office ... in Profile

Since its founding, NASA has been dedicated to the advancement of aeronautics and space science. The NASA Scientific and Technical Information (STI) Program Office plays a key part in helping NASA maintain this important role.

The NASA STI Program Office is operated by Langley Research Center, the lead center for NASA's scientific and technical information. The NASA STI Program Office provides access to the NASA STI Database, the largest collection of aeronautical and space science STI in the world. The Program Office is also NASA's institutional mechanism for disseminating the results of its research and development activities. These results are published by NASA in the NASA STI Report Series, which includes the following report types:

- TECHNICAL PUBLICATION. Reports of completed research or a major significant phase of research that present the results of NASA programs and include extensive data or theoretical analysis. Includes compilations of significant scientific and technical data and information deemed to be of continuing reference value. NASA counterpart of peer-reviewed formal professional papers, but having less stringent limitations on manuscript length and extent of graphic presentations.

- TECHNICAL MEMORANDUM. Scientific and technical findings that are preliminary or of specialized interest, e.g., quick release reports, working papers, and bibliographies that contain minimal annotation. Does not contain extensive analysis.

- CONTRACTOR REPORT. Scientific and technical findings by NASA-sponsored contractors and grantees.

- CONFERENCE PUBLICATION. Collected papers from scientific and technical conferences, symposia, seminars, or other meetings sponsored or co-sponsored by NASA.

- SPECIAL PUBLICATION. Scientific, technical, or historical information from NASA programs, projects, and missions, often concerned with subjects having substantial public interest.

- TECHNICAL TRANSLATION. English-language translations of foreign scientific and technical material pertinent to NASA's mission.

Specialized services that complement the STI Program Office's diverse offerings include creating custom thesauri, building customized databases, organizing and publishing research results ... even providing videos.

For more information about the NASA STI Program Office, see the following:

- Access the NASA STI Program Home Page at ***http://www.sti.nasa.gov***

- E-mail your question via the Internet to help@sti.nasa.gov

- Fax your question to the NASA STI Help Desk at (301) 621-0134

- Phone the NASA STI Help Desk at (301) 621-0390

- Write to:
  NASA STI Help Desk
  NASA Center for AeroSpace Information
  7121 Standard Drive
  Hanover, MD 21076-1320

NASA/CR-1999-209117

Fabrication and Assembly of High-Precision Hinge and Latch Joints for Deployable Optical Instruments

James E. Phelps
Nyma/ADF, Hampton, Virginia

National Aeronautics and
Space Administration

Langley Research Center
Hampton, Virginia 23681-2199

Prepared for Langley Research Center
under Contract NAS1-96013

August 1999

Available from:

NASA Center for AeroSpace Information (CASI)
7121 Standard Drive
Hanover, MD 21076-1320
(301) 621-0390

National Technical Information Service (NTIS)
5285 Port Royal Road
Springfield, VA 22161-2171
(703) 605-6000

Summary

Descriptions are presented of high-precision hinge and latch joints that have been co-developed, for application to deployable optical instruments, by NASA Langley Research Center and Nyma/ADF. Page-sized versions of engineering drawings are included in two appendices to describe all mechanical components of both joints. Procedures for assembling the mechanical components of both joints are also presented. The information herein is intended to facilitate the fabrication and assembly of the high-precision hinge and latch joints, and enable the incorporation of these joints into the design of deployable optical instrument systems.

Introduction

This report describes a zero freeplay, high-precision hinge joint and a zero freeplay, high-precision latch joint that have been co-developed, for application to deployable optical instruments, by NASA Langley Research Center (LaRC) and Nyma/ADF. Details of the high-precision hinge joint are considered to be in the public domain, and therefore, the manufacture and use of this joint are unrestricted by either NASA or Nyma/ADF. However, the details of the high-precision latch joint have been submitted for protection under United States Patent (NASA LaRC Patent Disclosure No. LAR 15763-1), and therefore, the manufacture and use of the latch joint are subject to patent license restrictions.

Page-sized versions of the engineering drawings for the hinge joint are presented in Appendix A, and drawings for the latch joint are presented in Appendix B. In addition to describing the components of the high-precision hinge and latch joints, this report presents procedures for assembling these two joints.

High-Precision Hinge Joint

There are four NASA LaRC drawings included in Appendix A that show the hinge joint assembly and its components. The components of the hinge joint are shown on drawing LC-1168515 and consist of the bushing-bearing assembly, which is bonded into the lug to make up the lug assembly and mated to the clevis assembly via the press-fit pin. The lug and clevis components are considered to be part of the structure within which the hinge joint is installed, and it is assumed that these components are made of a composite laminate in order to establish a low CTE in the structure. However, the present paper provides only interface requirements between the lug and clevis and the various bearing components. No detailed design data is provided on the lug and clevis.

The Bushing-Bearing Assembly

The Bushing-Bearing Assembly (LC-1168492) consists of: a machined bearing bushing (LD-1168486-3); a machined bearing hub (LD-1168486-1); a commercially-available, matched pair of angular contact bearings (Miniature Precision Bearing P/N: S1418M, or equivalent); a machined bearing hub plate (LD-1168486-2); and a commercially-available, spiral retaining ring (Smalley Steel P/N: VH-112, or equivalent).

Fabrication. The bearing bushing (LD-1168486-3) is machined with a lip on the inside surface to retain the bearing hub assembly. This bushing is also machined to have a .0003” clearance fit between its inside diameter and the outside diameter of the angular contact bearings.

The surface prep on the inside and outside surfaces of the bearing bushing should be consistent with adhesive requirements of the lug assembly (bonded to the outside diameter of the bearing bushing) and the angular contact bearings (bonded to the inside diameter of the bearing bushing). The inside and outside surfaces of the bushing should be prepared for bonding prior to assembly of the bearing bushing assembly to eliminate the possibility of any etching solution seeping into the angular contact bearings, which could destroy the bearings.

All demonstration and test versions of the high-precision hinge joint fabricated to date have employed a light film of Loctite™ RC/609 to bond the angular contact bearings to the bearing bushing (and the bearing hub). This adhesive requires only a clean, machined surface (i.e., no etching). However, versions of this joint that have employed composite lug and clevis assemblies have required etching of the outside diameter of the bearing bushing to ensure proper adhesion to the composite material.

The bearing hub (LD-1168486-1) is machined to have a .0003" clearance fit between its outside diameter and the inside diameter of the angular contact bearings. A raised lip is machined on the hubs outer surface to retain the angular contact bearings and to react the preloading force applied to them by the bearing hub plate. The hole through the center of the hub is machined to provide a .0007" press fit with the press-fit pin (LC-1168516-1).

The surface prep on the outside diameter of the bearing hub should be consistent with adhesive requirements for the angular contact bearings. As mentioned, all versions of the high-precision hinge joint fabricated to date have employed a light film of Loctite™ RC/609 to bond the angular contact bearings to the bearing hub and bearing bushing, and the only prep required for this adhesive is a surface cleaning.

Assembly. Apply a light film of Loctite™ RC/609 (or equivalent) to the outer surface of the bearing hub. Verify that the alignment marks on the bearings (LC-1168492) are oriented properly per the manufacturer's specifications, and slide the bearings on the hub until the inside race of the bearing contacts the raised lip on the hub.

Attach the bearing hub plate (LD-1168486-2) to the bearing hub using four no. 3-48 flat head screws. When these screws are tightened, the plate makes contact with the inter race of the angular contact bearing and properly preloads the bearings as recommended by the manufactures specifications. The proper preloading is achieved by machining the length of the bearing hub so there is approximately a .012" gap between the plate and the hub when the plate makes initial contact with the inter race of the bearing.

At this point, the hub and bearing assembly (See LD-1168492, Section A-A) is ready to be installed in the Bushing (LD-1168486-3). Apply a thin film of Loctite™ RC/609 (or equivalent) to the inside surface of the bushing and slide the hub and bearing assembly inside the bushing until the bearing race contacts the raised lip on the inside of the bushing. Install the spiral retaining ring in the grove machined in the bushing for this ring. The retaining ring provides additional restraint for the hub and bearing assembly.

The Lug Assembly

The lug assembly consists of the completed bushing-bearing assembly bonded into the lug. As mentioned previously, the lug is considered to be part of the structure within which the hinge joint is installed and is assumed to be made of a composite laminate. The physical dimensions of the lug are determined partially by interface requirements with the bushing-bearing assembly and partially by considerations derived from the design of the structure itself. The important

interface dimensions are the bore diameter of the hole in which the bushing-bearing assembly is bonded, and the thickness of the lug. Nominally, the lug should have the same thickness as the bearing bushing (LD-1168486-3), and the bore diameter of the hole should be approximately .010" larger than the outside diameter of the bearing bushing to allow adequate clearance for bonding adhesive. As mentioned previously, care should be taken when preparing the outside surface of the bushing for bonding into the lug so that the etching solution does not seep into the angular contact bearings. This solution could destroy the bearings.

The Clevis Assembly

The clevis assembly consists of a "U" shaped clevis with holes in each arm, into which metal bushings (LD-1168486-4) are bonded. Just like the lug, the clevis is considered to be part of the structure within which the hinge joint is installed and is assumed to be made of a composite laminate. The physical dimensions of the clevis are determined partially by interface requirements with the bushings and partially by considerations derived from the design of the structure itself. The important interface dimensions are the bore diameter of the hole in which the bushings are bonded, and the thickness of the clevis arms. Nominally, the clevis arms should have a slightly smaller thickness than the bushing (i.e., approximately .010" as shown in LC-1168515). This allows the pin to be pressed through the bushing without crushing or damaging the composite material of the clevis arms. (A more detailed description of this process is presented later in this report.) The bore diameter of the holes in the clevis arms should be approximately .010" larger than the outside diameter of the bushings to allow adequate clearance for the bonding adhesive.

The Press Fit Pin

Fabrication. The final assembly of the high-precision hinge joint is accomplished by inserting a press-fit pin through the clevis arm bushings and the bearing hub in the lug. The press fit pin (LC-1168516-1) is machined to have a .0007 press fit with bushings (LD-1168486-4) and the bearing hub (LD-1168486-1). To reduce weight, the pin is hollowed out with a 0.25"-diameter hole.

Assembly. Align the hole in the hub of the lug assembly with the holes in the bushings of the clevis assembly. Place shim stock, approximately .042 thick, between the hub and the inside surface of the metal bushings bonded in each leg of the composite clevis. This will allow the pin to be pressed through the bushing and hub without damaging the composite material. Press the pin (LC-1168516-1) through the clevis bushings and the hub until the pin is evenly spaced on each side of the outside of the bushings by approximately .070".

High-Precision Latch Joint

There are ten NASA LaRC drawings included in Appendix B showing the high-precision latch joint and its components. The components consist of the tapered bearing latch half assembly, the locking mechanism assembly, and the lug latch half assembly as shown on drawing LD-1168497. The tapered bearing latch half (LD-1168468-1) and the lug latch half (LD-1168469) components of the latch joint can be considered to be part of the structure within which the latch joint is installed (like the lug and clevis of the high-precision hinge joint). The present paper provides detailed design data for both of these components that might be adequate

for some structural installations. However, modifications to the lug latch half and the tapered bearing latch half will probably be required for most structural installations.

The Tapered Bearing Latch Half Assembly

Fabrication. The Tapered Bearing Latch Half Assembly (LD-1168475-1) consists of a machined tapered bearing latch half (LD-1168468-1), a machined tapered bearing mount (LD-1168468-2), and a commercially available, tapered roller bearing (Timken P/N: A4050, or equivalent). There is a .499" diameter hole in the body of the tapered bearing latch half (LD-1168468-1) to provide a .001" press fit with the tapered bearing mount (LD-1168468-2). The tapered bearing latch half also has a threaded shaft for installation in the deployable structure. However, as mentioned previously, this detail might require modification for many structural installations.

Assembly. The tapered bearing mount is pressed into the tapered bearing latch half until the hex head of the bearing mount is flush with the top of the latch half as shown on LD-1168475-1. Position the hex head flat on the bearing mount, which is adjacent to the dowel pin (see LD-1168468-2), parallel with the side of the latch half body. With the bearing mount properly positioned, the tapered roller bearing is pressed onto the bearing mount so there is approximately .025" clearance between the top of the bearing and the inside surface of the latch half, as shown on LD-1168475-1. Shim stock is used to maintain this clearance. This press fit eliminates freeplay between components.

The Locking Mechanism Assembly

Fabrication. The Locking Mechanism Assembly (LD-1168487-1) consists of: a lock fitting mounting bracket (LD-1168482-1); two lock fittings (LC-1168506-1); two springs (Associate Spring P/N: CO240-029-0440, or equivalent); two shafts (LA-1168484-1); two 2-56 flat head screws; a bottom cap (LC-1168499-1); a bearing (Allied Devices Corp. P/N DE1D5, or equivalent); and a retaining ring (Truarc P/N: N5000-37, or equivalent).

Assembly. The lock fitting mounting bracket (LD-1168482-1) is the primary component for assembling the locking mechanism. It is counterbored on the inside to fit one end of each of the lock fitting springs. Each lock fitting (LC-1168506-1) is counterbored to fit the opposite end of the spring. These two lock fittings and the two springs are held in place, and allowed to rotate, by the two shafts (LC-1168484-1). The two shafts are lightly pressed through the .109" diameter holes in the mounting bracket and the lock fittings. The bottom cap (LC-1168499-1) is positioned on the inside of the mounting bracket with its two threaded tangs aligning with the two countersink holes on the out side of the mounting bracket. The bottom cap is held in place with two 2-56 flat head screws. The bottom cap is designed for mounting a bearing and holding the bearing in place with a retaining ring.

After the locking mechanism is assembled, it is attached to the tapered bearing mount on the tapered bearing latch half assembly with a 8-32 socket-head cap screw which fits through the center of the bearing mount (LD-1168475-1). The dowel pin in the bearing mount is aligned with the hole in the top of the lock fitting mounting bracket before the socket-head cap screw is tightened (LC-1168498). This locking mechanism assembly attached to the tapered bearing latch half assembly locks the two latch halves together (LD-1168497-1).

The Lug Latch Half Assembly

The Lug Latch Half Assembly (LD-1168475-2) consists of a lug latch half (LD-1168469-1) and a tapered bearing cup (Timken P/N: A4143, or equivalent). The lug latch half (LD-1168469-1) is similar to the tapered bearing latch half in that it has a threaded shaft for installation in the deployable structure. However, as mentioned previously, this detail might require modification for many structural installations.

There is a 1.379" diameter counterbore in the body of the lug latch half to provide a .001" press fit with the tapered bearing cup. The tapered raised surfaces on each side of the counterbore provide a surface for the spring loaded lock fittings to wedge against. The tapered bearing cup (Timken P/N: A4143, or equivalent) is pressed into the lug latch half counterbore until it is fully seated at the bottom of the counterbore, see LD-1168475-2. The press fit eliminates freeplay between the components.

Operation of the High-Precision Latch Joint

The two latch halves are locked together when the spring loaded lock fittings, in the locking mechanism, compress together enabling the locking mechanism to move through the circular opening of the lug latch half assembly (LD-1168497-1). As the spring loaded lock fittings clear the lip of the bearing cup they extend outward and engage the raised surfaces on the lug latch half (LD-1168497-1). The wedging action of the spring loaded lock fittings against these raised surfaces locks the latch halves together and establishes a lateral preload between the tapered roller bearing components.

The spring loaded lock fittings should not fully extend outward when they contact the raised surfaces on the lug latch half. Proper alignment and operation of the lock fittings are achieved when these fittings wedge against the raised surfaces of the lug latch half assembly without contacting any other surfaces of the latch assembly. This alignment and operation ensures that all preload applied by the springs within the lock fitting is transferred through the lock fittings to the raised surfaces of the lug latch half assembly.

Occasionally some adjustment in the alignment of the lock fittings may have to be made in order to obtain the proper wedging action. The adjustment can be achieved by increasing the .025" gap between the top of the tapered bearing and the inside surface of the latch half (LD-1168475-1), or by machining .002" to .005" off the top of the lock bracket (LD-1168482-1).

The latch halves can be separated using a special tool to depress the lock fittings. One such special tool can be made from a modified pair of needle nose pliers. These pliers have a spherical ended pin pressed through and welded to each jaw. The spherical end pins fit spherical indention on the surfaces of the spring loaded lock fittings. Pressing the lock fittings together with the modified pliers unlocks the latch and the two latch halves can be separated.

Appendix A

Reference Drawings for High-Precision Hinge Joint

There are four archived NASA LaRC drawings which detail the design of the high-precision hinge joint. Page-size versions of these drawings are included herein for convenience. These drawings are:

- NASA LaRC No. LC-1168515: "Composite Lug-Clevis Bearing Assembly."
- NASA LaRC No. LC-1168492: "Bushing-Bearing Assembly."
- NASA LaRC No. LD-1168486: "Hub and Bushing Hardware."
- NASA LaRC No. LC-1168516: "Clevis Pin."

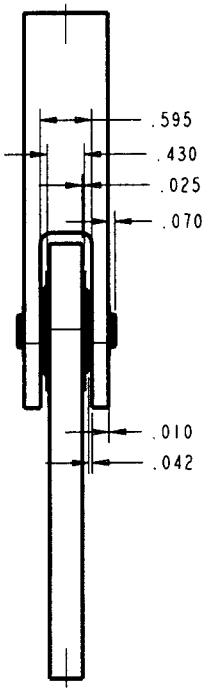

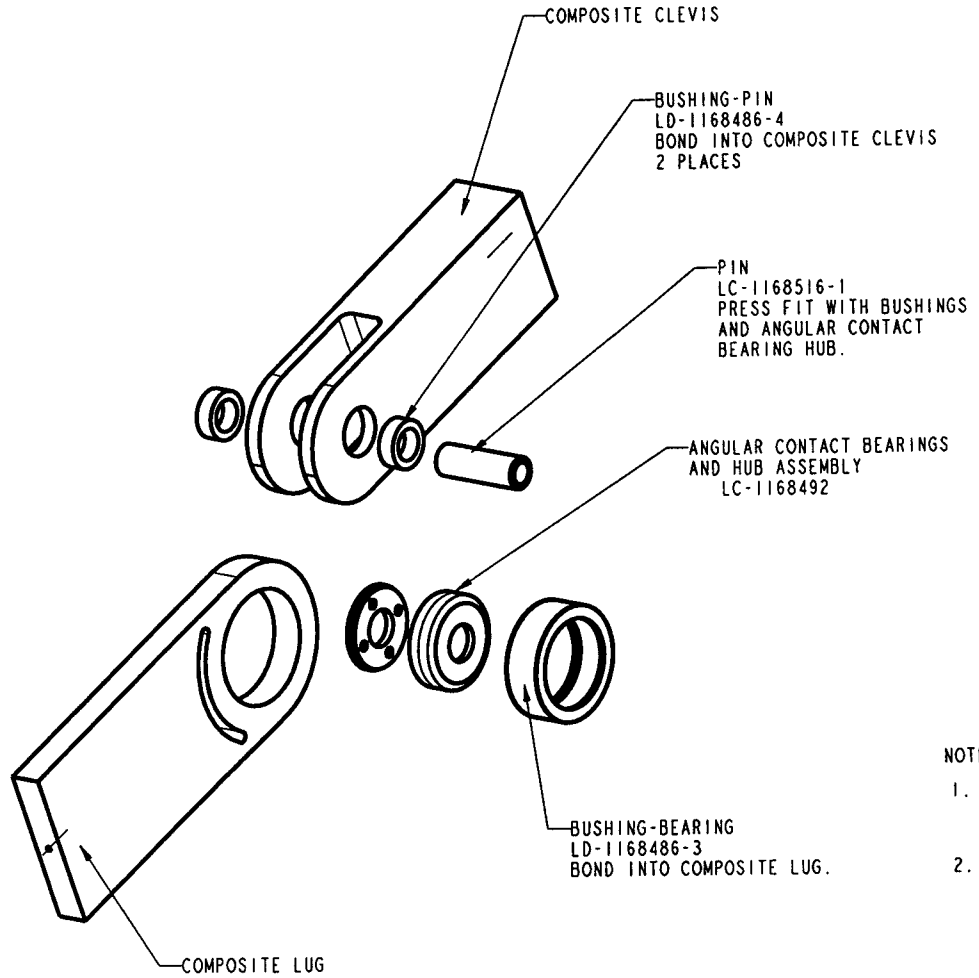

NOTES:

1. COMPOSITE OPTICS, INC. ARE TO BOND BUSHING IN PLACES PER COI DRAWING 1098604
2. COMPOSITE OPTICS, INC. ARE TO PROVIDE THE COMPOSITE HARDWARE AND NASA LANGLEY RESEARCH CENTER WILL PROVIDE ALL OTHER HARDWARE.

-1 LUG-CLEVIS BEARING ASSEMBLY
(FOR COMPOSITE MATERIAL)

REVISIONS				
ZONE	LTR	DESCRIPTION	DATE	APPROVED

-2 QTY REQD	-1 QTY REQD	CAGE CODE	PART OR IDENTIFYING NUMBER	NOMENCLATURE OR DESCRIPTION	MATERIAL SPECIFICATION	ITEM NO.
						1

PARTS

PART DASH NO.	NEXT	FINAL	NEXT ASSY	USED ON
	QTY REQD PER ASSY		APPLICATION	

UNLESS OTHERWISE SPECIFIED DIMENSIONS ARE IN INCHES
TOLERANCES
DECIMALS .XX ± .03 .XXX ± .010
ANGULAR .X ± .5°
DO NOT SCALE DRAWING

TREATMENT
FINISH
SIMILAR TO
SPECIAL MARKING STD

CONTRACT NO.

	APPROVAL	DATE
DRAWN	J E PHELPS	11-04-90
CHECKED		
DESIGNED		
LEAD ENGR.		
BRANCH		

NATIONAL AERONAUTICS & SPACE ADMINISTRATION
LANGLEY RESEARCH CENTER
HAMPTON, VIRGINIA 23681-0001

TITLE DEPLOYABLE LIDAR TELESCOPE PROJECT
COMPOSITE LUG-CLEVIS BEARING ASSEMBLY

SIZE	CAGE CODE	DWG NO.	REV.
C	25305	1168515	-

SCALE 1/1 SHEET 1 OF 1

CAGE CODE 25305 DWG NO SH 1 REV -

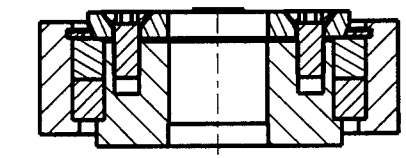

SECTION A-A

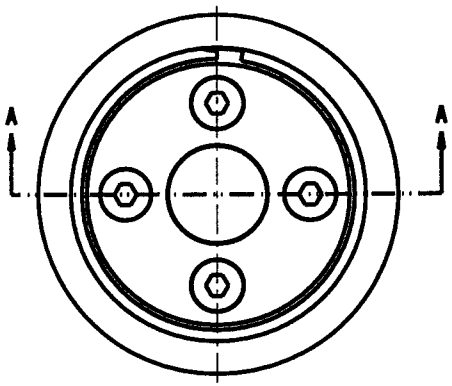

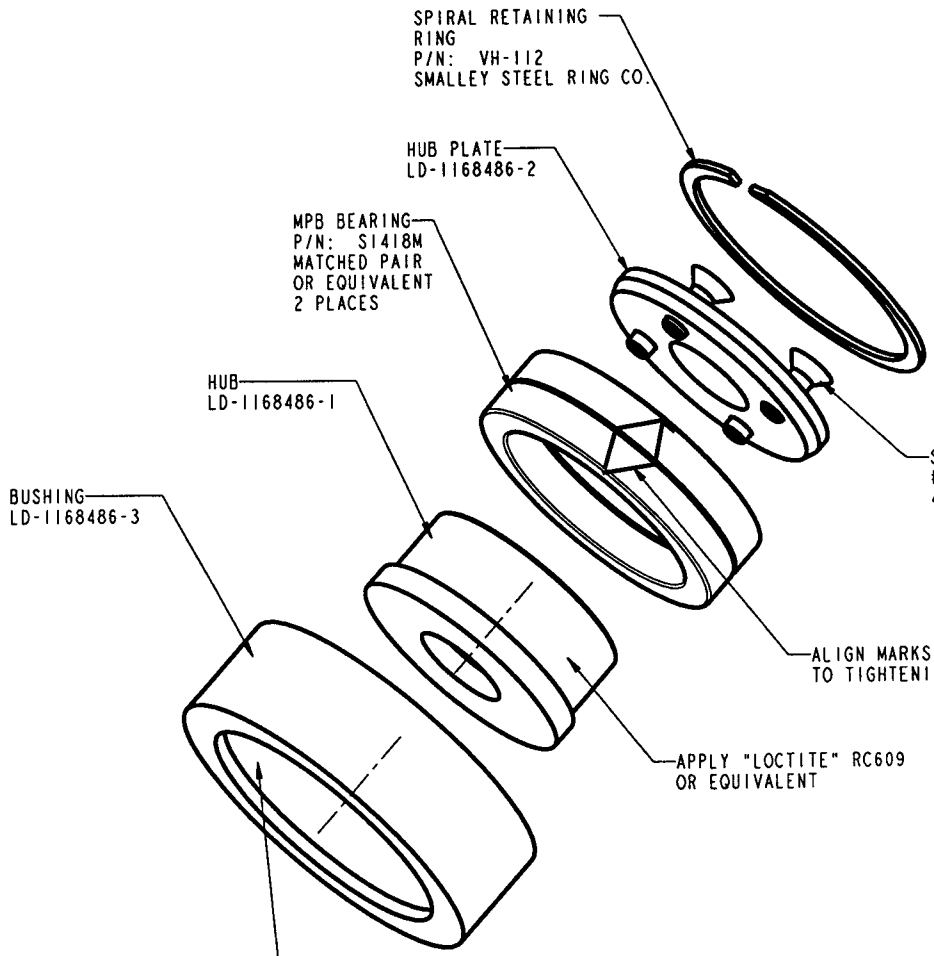

REVISIONS				
ZONE	LTR	DESCRIPTION	DATE	APPROVED

-3 QTY REQD	-1	CAGE CODE	PART OR IDENTIFYING NUMBER	NOMENCLATURE OR DESCRIPTION	MATERIAL SPECIFICATION	ITEM NO.
				PARTS		1

PART DASH NO.	NEXT	FINAL	NEXT ASSY	USED ON
	QTY REQD PER ASSY		APPLICATION	

UNLESS OTHERWISE SPECIFIED DIMENSIONS ARE IN INCHES
TOLERANCES
DECIMALS .XX ± .03 .XXX ± .010 .XXXX ± .0010
ANGULAR .X ± .5°
DO NOT SCALE DRAWING

TREATMENT
FINISH
SIMILAR TO
SPECIAL MARKING STD

CONTRACT NO.

	APPROVAL	DATE
DRAWN	J E PHELPS	6-29-97
CHECKED		
DESIGNED		
LEAD ENGR.		
BRANCH		

NATIONAL AERONAUTICS & SPACE ADMINISTRATION
LANGLEY RESEARCH CENTER
HAMPTON, VIRGINIA 23681-0001

TITLE DEPLOYABLE LIDAR TELESCOPE PROJECT
BUSHING-BEARING ASSEMBLY

SIZE	CAGE CODE	DWG NO.	REV.
C	25305	1168492	-

SCALE 3/1 SHEET 1 OF 1

CAGE CODE 25305 DWG NO SH 1 REV -

REVISIONS				
ZONE	REV	DESCRIPTION	DATE	APPROVED
	A	-2 CHANGED CHAM FROM 45° X .03 TO .02 X .05	5/20/98	
		-4 MODIFIED FOR PRESS FIT PIN	5/20/98	
	B	CHANGED MAT'L. FROM 6061-T6 AL TO INVAR A36	11-09-98	

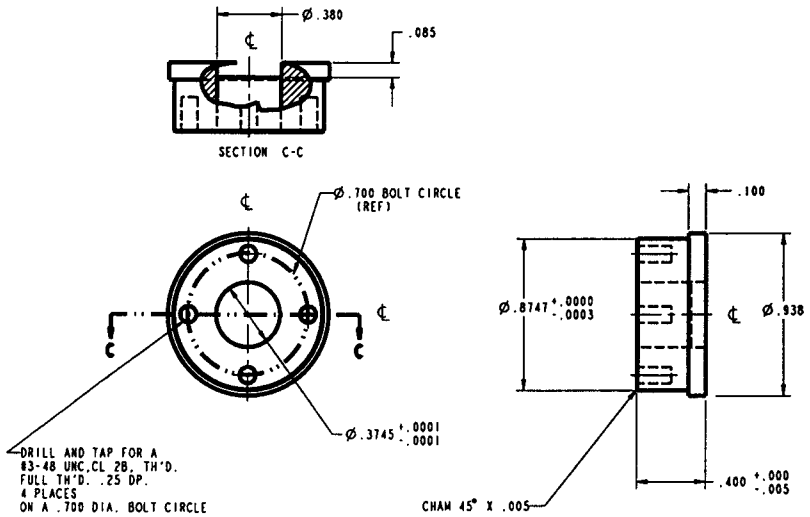

-1 HUB LG
MAT'L: INVAR A 36 IRON NICKLE ALLOY

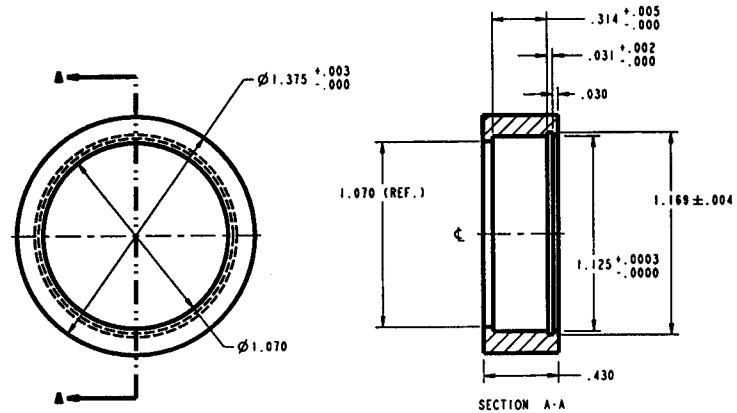

-3 BUSHING - BEARING
(USE WITH COMPOSITE LUG)
MAT'L: INVAR A36 IRON-NICKLE ALLOY

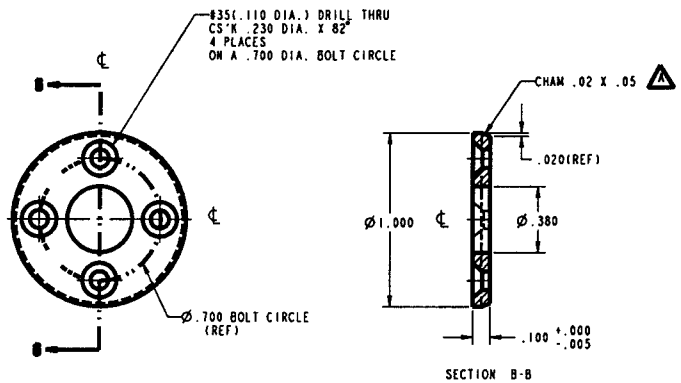

-2 HUB PLATE LG
MAT'L: INVAR A36 IRON-NICKLE ALLOY

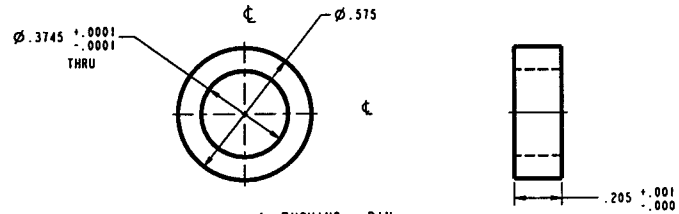

-4 BUSHING - PIN
(USE WITH COMPOSITE CLEVIS)
MAT'L: INVAR A36 IRON-NICKLE ALLOY

NOTES:

1. BREAK SHARP EDGES.

PARTS LIST

NATIONAL AERONAUTICS AND SPACE ADMINISTRATION
LANGLEY RESEARCH CENTER
HAMPTON, VA 23681-0001

TITLE DEPLOYABLE LIDAR TELESCOPE PROJECT
HUB & BUSHING HARDWARE - REVOLUTE JOINT - LARGE

SIZE D | CAGE CODE | DWG. NO. 1168486 | REV. B

SCALE | WEIGHT | SHEET 1 OF 1

UNLESS OTHERWISE SPECIFIED DIMENSIONS ARE IN INCHES. TOLERANCES: ANGULAR ±0.5° DECIMALS .X ±.03 .XX ±.02 .XXX ±.010 DO NOT SCALE DRAWING

TREATMENT | FINISH 63 | SIMILAR TO | SPECIAL MARKING

APPROVALS	DATE
DRAWN J E PHELPS	4-24-98
CHECKED	
SUBSYSTEM	
PE	

ADDITIONAL APPROVALS	DATE
FRACTURE CONTROL	
STRESS	
MANDRY/RIVETING	

PART DASH NO.	NEXT QTY REQD PER ASSY	FINAL	NEXT ASSY	USED ON
			APPLICATION	

ITEM	QTY	CAGE CODE	PART OR IDENTIFYING NO	NOMENCLATURE OR DESCRIPTION	MATERIAL SPECIFICATION	ZONE	REV

REVISIONS				
ZONE	LTR	DESCRIPTION	DATE	APPROVED

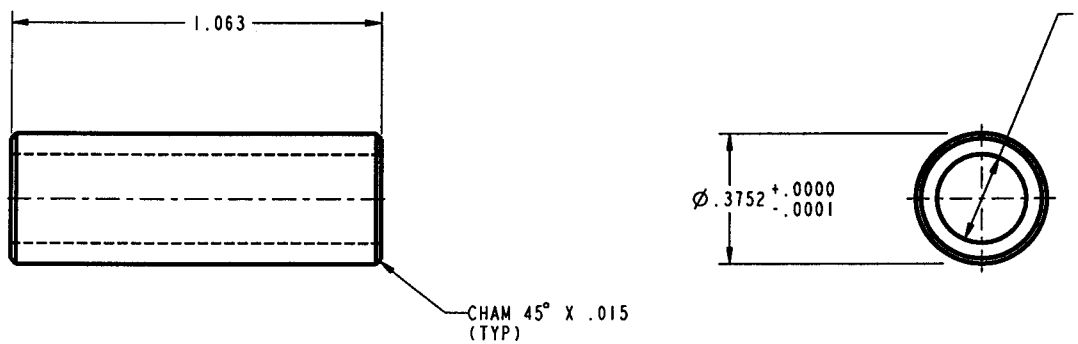

-1 CLEVIS PIN

MAT'L: INVAR A36 IRO-NICKLE ALLOY
REQ'D: 5

NOTES:

1. BREAK ALL SHARP EDGES.

-3 QTY REQD	-1	CAGE CODE	PART OR IDENTIFYING NUMBER	NOMENCLATURE OR DESCRIPTION	MATERIAL SPECIFICATION	ITEM NO.
						1

PARTS

PART DASH NO.	NEXT FINAL QTY REQD PER ASSY	NEXT ASSY	USED ON
		APPLICATION	

UNLESS OTHERWISE SPECIFIED DIMENSIONS ARE IN INCHES
TOLERANCES
DECIMALS .XX ± .03 .XXX ± .010 .XXXX ± .0010
ANGULAR .X ± .5°
DO NOT SCALE DRAWING

TREATMENT
FINISH 63
SIMILAR TO
SPECIAL MARKING ETC.

CONTRACT NO.

	APPROVAL	DATE
DRAWN	J E PHELPS	11-3-98
CHECKED		
DESIGNED		
LEAD ENGR.		
BRANCH		

NATIONAL AERONAUTICS & SPACE ADMINISTRATION
LANGLEY RESEARCH CENTER
HAMPTON, VIRGINIA 23681-0001

TITLE DEPLOYABLE LIDAR TELESCOPE PROJECT
CLEVIS PIN

SIZE	CAGE CODE	DWG NO.	REV.
C	25305	1168516	-

SCALE 4/1 SHEET 1 OF 1

REV - SH 1 DWG NO 1168516 CAGE CODE 25305

Appendix B

Reference Drawings for High-Precision Latch Joint

There are ten archived NASA LaRC drawings which detail the design of the high-precision latch joint. Page-size versions of these drawings are included herein for convenience. These drawings are:

1. NASA LaRC No. LD-1168497: "Linear Latch Joint Mod. Assembly."
2. NASA LaRC No. LD-1168475: "Bearing Latch Half & Lug Latch Half Assembly."
3. NASA LaRC No. LD-1168468: "Tapered Bearing Mount and Latch Half."
4. NASA LaRC No. LD-1168469: "Lug Latch Half."
5. NASA LaRC No. LD-1168487: "Lock Fitting Bracket Assembly Mod."
6. NASA LaRC No. LD-1168482: "Lock Fitting Mounting Bracket & End Cap."
7. NASA LaRC No. LC-1168498: "Bearing Mount and Lock Fitting Mod."
8. NASA LaRC No. LC-1168506: "Lug Latch Half – Linear Latch."
9. NASA LaRC No. LC-1168484: "Shaft New – Lock Fitting."
10. NASA LaRC No. LC-1168499: "End Cap Bearing – Lock Bracket."

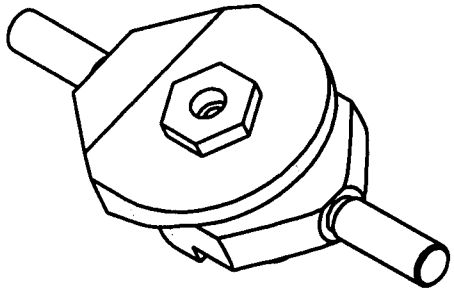

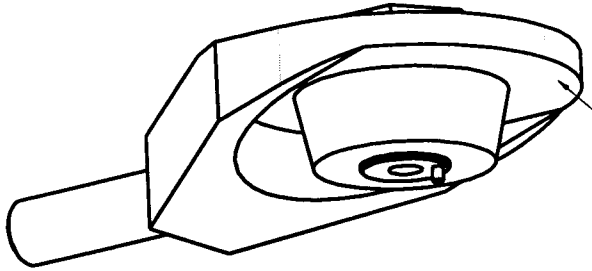

TAPERED BEARING LATCH HALF ASSEMBLY
LD-1168475-1

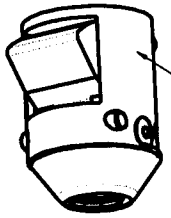

LOCK BRACKET MOD. ASSEMBLY
LD-1168487-1

LUG LATCH HALF MOD.
LD-1168483-1
TAPERED BEARING CUP
TIMKEN P/N: A4143
ASSEMBLE PER DRAWING LD-1168475-2.

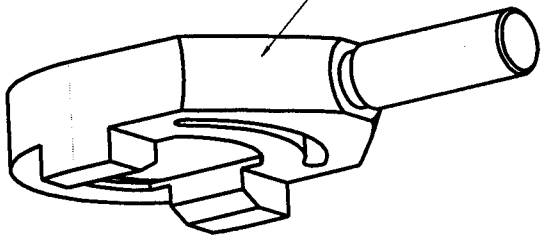

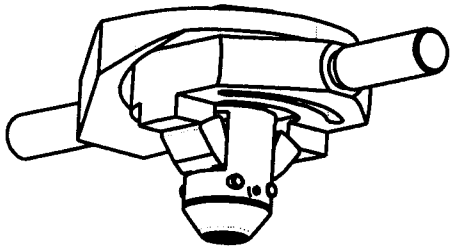

-1 LINEAR LATCH JOINT MOD. ASSEMBLY

REVISIONS				
ZONE	REV	DESCRIPTION	DATE	APPROVED

PARTS LIST

PART DASH NO	NEXT	FINAL	NEXT ASSY	USED ON
	QTY REQD PER ASSY		APPLICATION	

UNLESS OTHERWISE SPECIFIED DIMENSIONS ARE IN INCHES TOLERANCES ARE
DECIMALS .XX ± .03 .XXX ± .010
ANGULAR ± 2°
DO NOT SCALE DRAWING
TREATMENT
FINISH
SIMILAR TO

CONTRACT NO

APPROVALS	DATE
DRAWN J. E. PHELPS	7-26-98
CHECKED	
DESIGNER	
LEAD ENGR	
BRANCH	

NATIONAL AERONAUTICS & SPACE ADMINISTRATION
LANGLEY RESEARCH CENTER
HAMPTON, VA 23681-0001

TITLE
DEPLOYABLE LIDAR TELESCOPE PROJECT
LINEAR LATCH JOINT MOD. ASSEMBLY

SIZE D CAGE CODE 25305 DWG. NO. 1168497 REV. -
SCALE 3/1 SHEET 1 OF 1

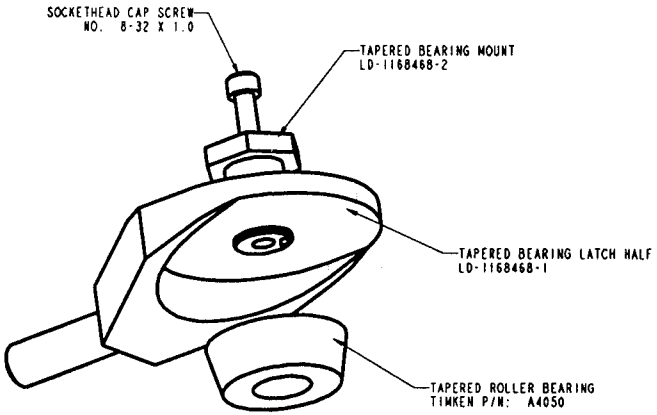

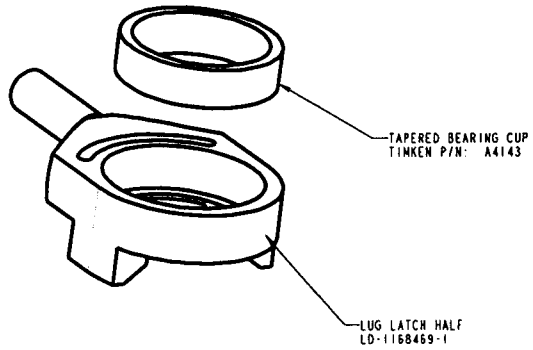

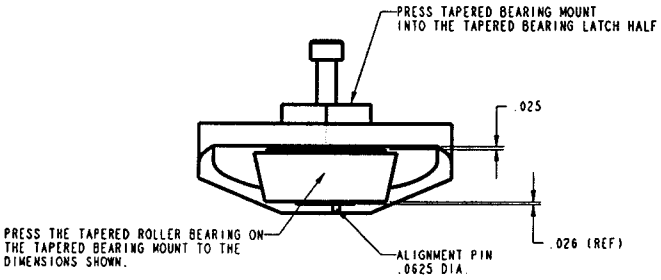

-1 TAPERED BEARING LATCH HALF ASSEMBLY

(SCALE: 2/1)

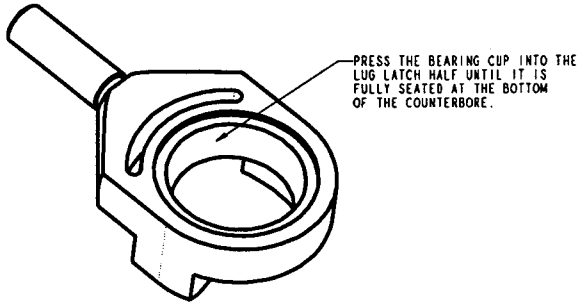

-2 LUG LATCH HALF ASSEMBLY

(SCALE: 2/1)

NOTES:

1. NEXT ASSEMBLY LD-1168474.

CAGE	DWG. NO.	SH 1	REV.

REVISIONS

ZONE	REV	DESCRIPTION	DATE	APPROVED

PARTS LIST

QTY REQD	CAGE CODE	PART OR IDENTIFYING NO.	NOMENCLATURE OR DESCRIPTION	MATERIAL SPECIFICATION	ZONE	ITEM NO.

ADDITIONAL APPROVALS	DATE
FRACTURE CONTROL	
STRESS	
MANUFACTURING	

PART DASH NO	NEXT QTY REQD PER ASSY	FINAL	NEXT ASSY	USED ON
			APPLICATION	

UNLESS OTHERWISE SPECIFIED DIMENSIONS ARE IN INCHES. TOLERANCES:
ANGULAR ±0.5°
DECIMALS .XX ± .03, .XXX ± .010
DO NOT SCALE DRAWING
FINISH
FINISH TO

APPROVALS	DATE
DRAWN J C PHELPS	1-21-98
CHECKED	
SUBSYSTEM	
TYPE	

NATIONAL AERONAUTICS AND SPACE ADMINISTRATION
LANGLEY RESEARCH CENTER
HAMPTON, VA 23681-0001

TITLE
DEPLOYABLE LIDAR TELESCOPE PROJECT
BEARING LATCH HALF & LUG LATCH HALF ASSEMBLY - LINEAR LATCH JOINT

SIZE	CAGE CODE	DWG. NO.	REV.
D		1168475	

SCALE 2.00 SHEET 1 OF 1

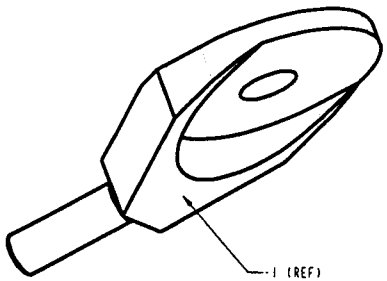

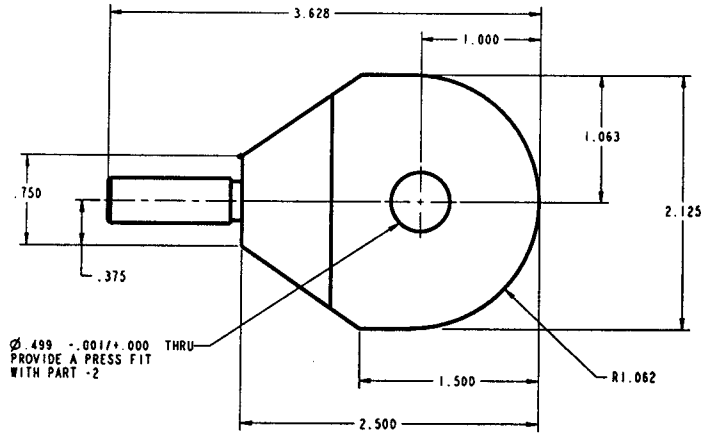

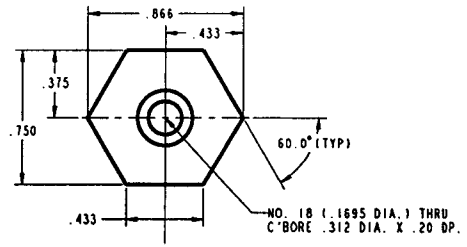

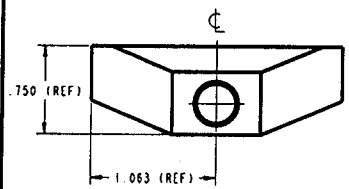

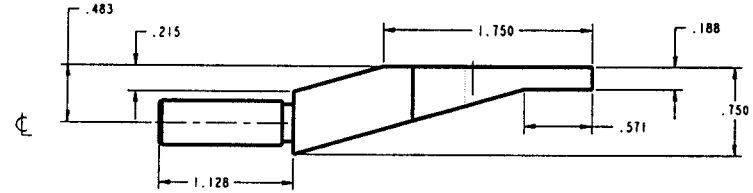

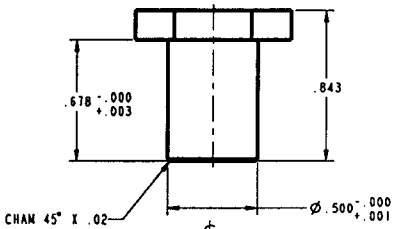

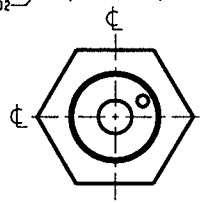

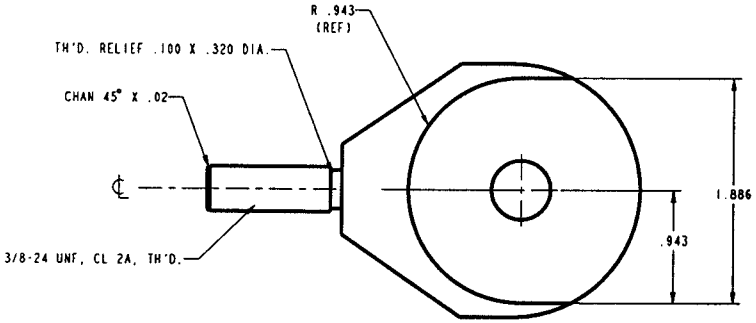

-1 TAPERED BEARING LATCH HALF
MAT'L: 6061-T6 AL ALLOY
(SCALE: 2/1)

-2 TAPERED BEARING MOUNT
MAT'L: 2024-T4 AL ALLOY
(SCALE: 3/1)

NOTES:
1. BREAK SHARP EDGES.
2. ASSEMBLY DRAWING LD-1168474 AND LD-1168475.

REVISIONS

ZONE	REV	DESCRIPTION	DATE	APPROVED

PARTS LIST

QTY REQD	CAGE CODE	PART OR IDENTIFYING NO.	NOMENCLATURE OR DESCRIPTION	MATERIAL SPECIFICATION	ZONE	ITEM NO.

ADDITIONAL APPROVALS	DATE
FRACTURE CONTROL	
STRESS	
MANUFACTURING	

PART DASH NO	NEXT	FINAL	NEXT ASSY	USED ON
	QTY REQD PER ASSY		APPLICATION	

UNLESS OTHERWISE SPECIFIED DIMENSIONS ARE IN INCHES. TOLERANCES:
ANGULAR ±0°0'
DECIMALS .X ±.1 .XX ±.03 .XXX ±.010
DO NOT SCALE DRAWING
BREAK EDGES
FINISH 64
SIMILAR TO

APPROVALS	DATE
DRAWN J.E. PHELPS	1-14-98
CHECKED	
SUBSYSTEM	
TYPE	

NATIONAL AERONAUTICS AND SPACE ADMINISTRATION
LANGLEY RESEARCH CENTER
HAMPTON, VA 23681-0001

TITLE
DEPLOYABLE LIDAR TELESCOPE PROJECT
TAPERED BEARING MOUNT AND LATCH HALF - LINEAR LATCH JOINT

SIZE D | CAGE CODE | DWG. NO. 1168468 | REV.
SCALE 2.00 | SHEET 1 OF 1

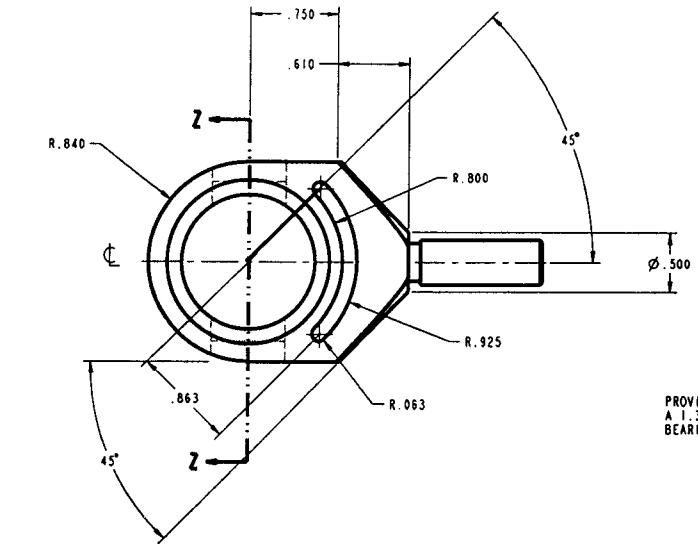

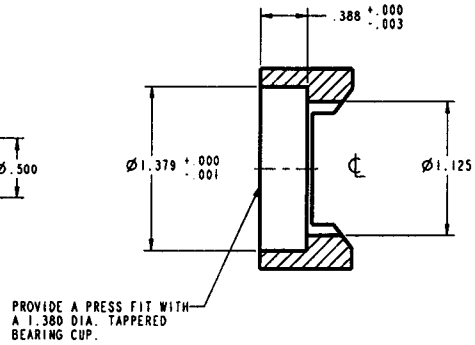

SECTION Z-Z

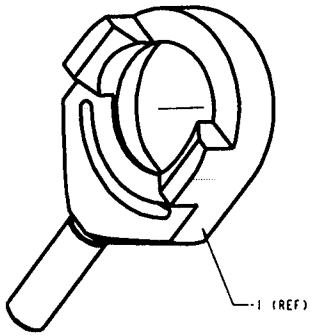

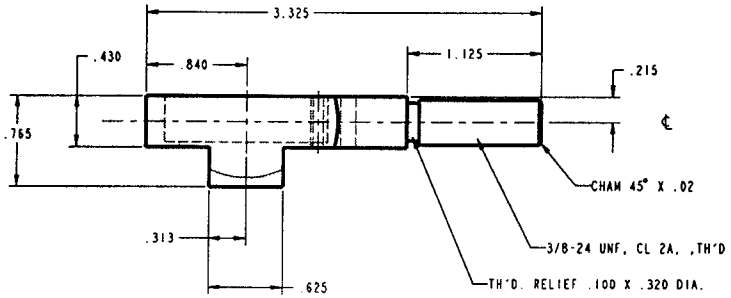

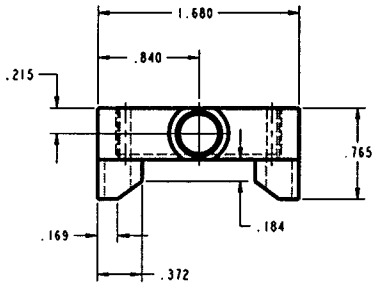

NOTES:

1. BREAK SHARP EDGES.
2. NEXT ASSEMBLY LD-1168474 AND LD-1168475.

-1 LUG LATCH HALF

MAT'L: 6061-T6 AL ALLOY

(SCALE: 2/1)

REVISIONS				
ZONE	REV	DESCRIPTION	DATE	APPROVED

PARTS LIST

REV STOCK	CAGE CODE	PART OR IDENTIFYING NO.	NOMENCLATURE OR DESCRIPTION	MATERIAL SPECIFICATION	ZONE	TYPE

ADDITIONAL APPROVALS	DATE
FRACTURE CONTROL	
STRESS	
MANUFACTURING	

PART DASH NO	NEXT	FINAL	NEXT ASSY	USED ON
	QTY REQD PER ASSY		APPLICATION	

UNLESS OTHERWISE SPECIFIED DIMENSIONS ARE IN INCHES
TOLERANCES:
ANGULAR ±0.5° DECIMALS .XX ±.03 .XXX ±.010
DO NOT SCALE DRAWING
TREATMENT
FINISH 64
SIMILAR TO

APPROVALS	DATE
DRAWN J C PHELPS	1-15-88
CHECKED	
SUBSYSTEM	
TYPE	

NATIONAL AERONAUTICS AND SPACE ADMINISTRATION
LANGLEY RESEARCH CENTER
HAMPTON, VA 23681-0001

TITLE DEPLOYABLE LIDAR TELESCOPE PROJECT

LUG LATCH HALF - LINEAR LATCH JOINT

SIZE D | CAGE CODE | DWG. NO. 1168469 | REV.

SCALE 2.00 | SHEET 1 OF 1

CAGE	DWG. NO.	SH	REV.
25305		1	A

REVISIONS

ZONE	DESCRIPTION	DATE	APPROVED
B6	CHANGED LOCK FITTING LC-1168481-1 TO LC1168506-1	11-05-98	
B6	CHANGED BEARING CAP ADDED BEARING & RETAINER RING	11-05-98	

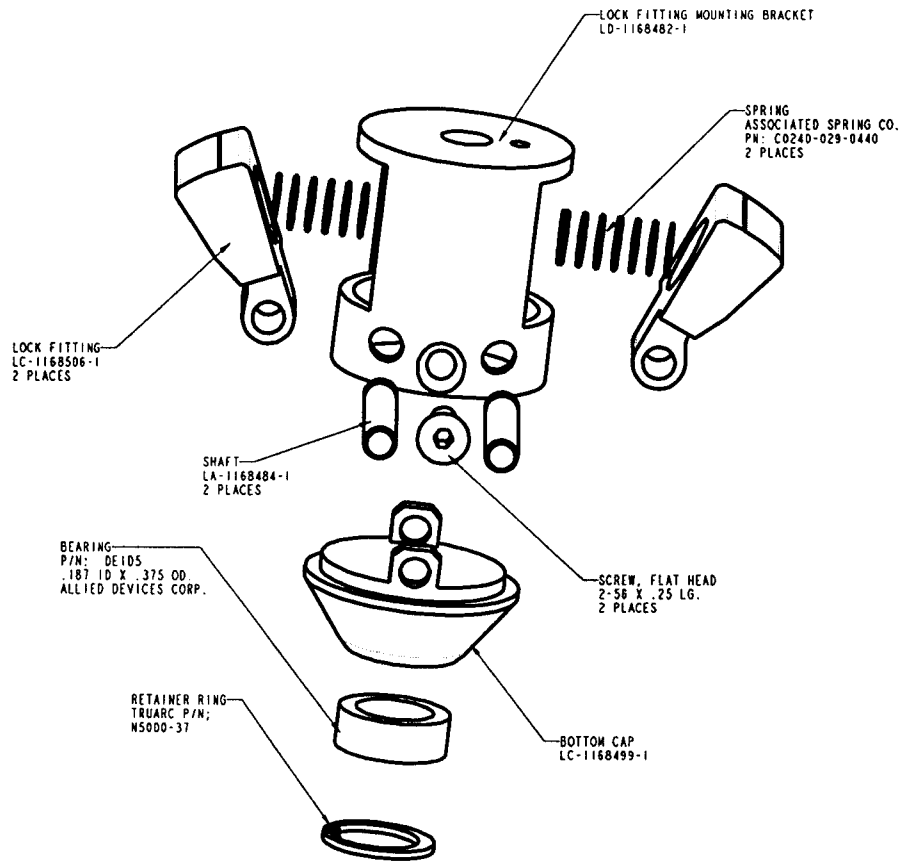

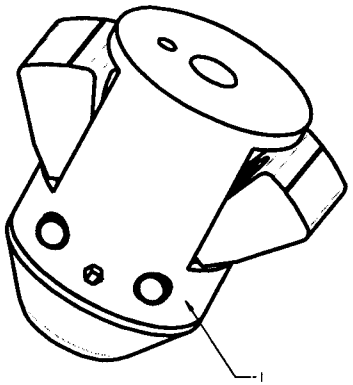

-1 LOCK FITTING MOUNTING BRACKET ASSEMBLY

PARTS LIST

QTY REQD	CAGE CODE	PART OR IDENTIFYING NO.	NOMENCLATURE OR DESCRIPTION	MATERIAL SPECIFICATION	ITEM NO.

PART DASH NO.	NEXT	FINAL	NEXT ASSY	USED ON
	QTY REQD PER ASSY		APPLICATION	

UNLESS OTHERWISE SPECIFIED DIMENSIONS ARE IN INCHES TOLERANCES ARE
DECIMALS ANGULAR
.XX ± .03 ± .5°
.XXX ± .010
DO NOT SCALE DRAWING

TREATMENT

FINISH

SIMILAR TO

CONTRACT NO GK 14

APPROVALS	DATE
DRAWN J E PHELPS	6-12-98
CHECKED	
DESIGNER	
LEAD ENGR.	
BRANCH	

NATIONAL AERONAUTICS & SPACE ADMINISTRATION
LANGLEY RESEARCH CENTER
HAMPTON, VA 23681-0001

TITLE DEPLOYABLE LIDAR TELESCOPE PROJECT
LOCK FITTING BRACKET ASSEMBLY MOD.
LINEAR LATCH JOINT

SIZE	CAGE CODE	DWG. NO.	REV.
D	25305	1168487	A

SCALE 5/1 SHEET 1 OF 1

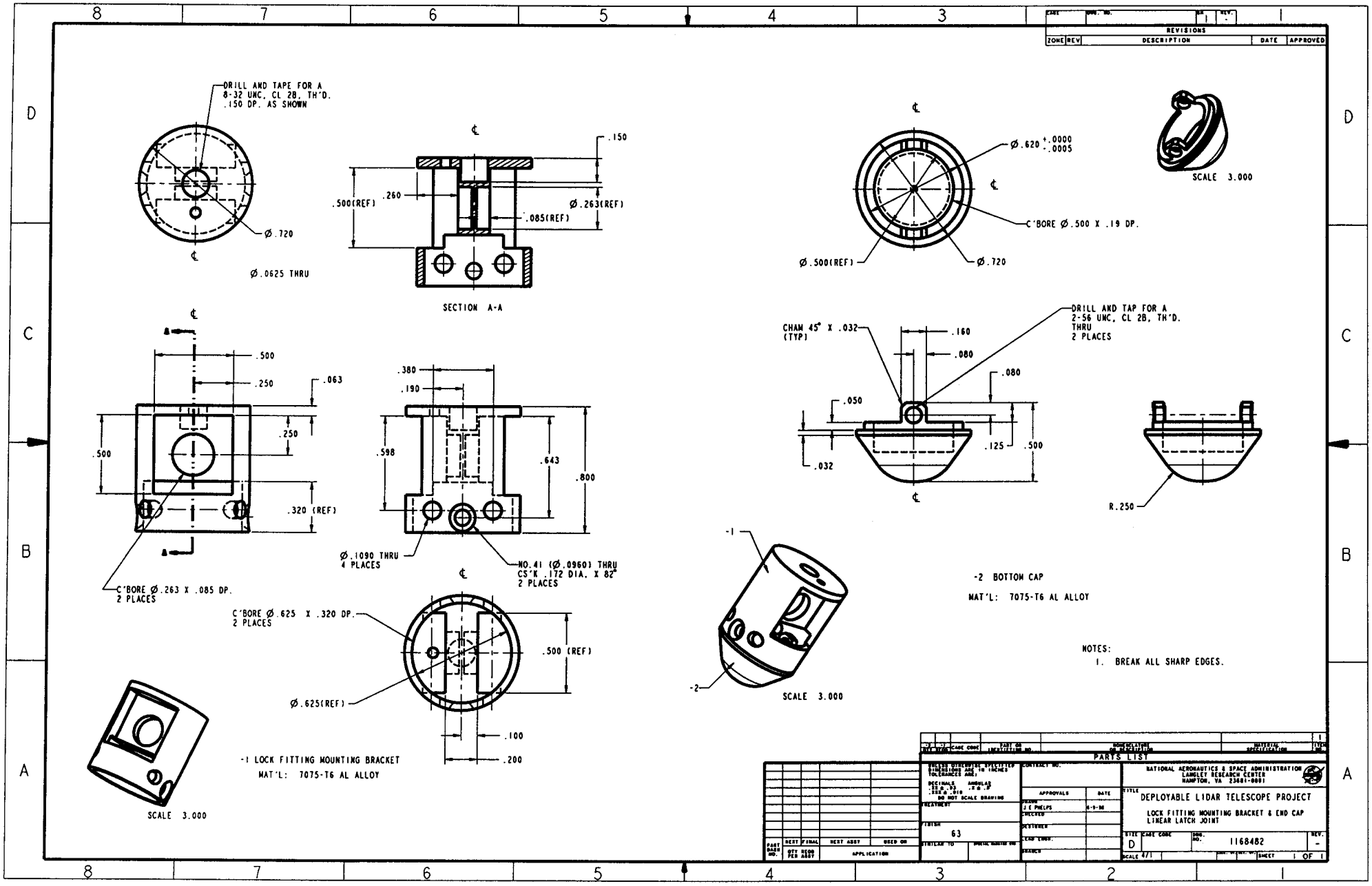
DRILL AND TAPE FOR A 8-32 UNC, CL 2B, TH'D. .150 DP. AS SHOWN
Ø.720
Ø.0625 THRU
SECTION A-A
.150
.500(REF)
.260
Ø.263(REF)
.085(REF)
Ø.620 +.0000 -.0005
C'BORE Ø.500 X .19 DP.
Ø.500(REF)
Ø.720
SCALE 3.000
.500
.250
.063
.250
.500
.320 (REF)
.380
.190
.598
.643
.800
Ø.1090 THRU 4 PLACES
NO.41 (Ø.0960) THRU CS'K .172 DIA. X 82° 2 PLACES
C'BORE Ø.263 X .085 DP. 2 PLACES
CHAM 45° X .032 (TYP)
.160
.080
.080
.050
.125
.500
.032
DRILL AND TAP FOR A 2-56 UNC, CL 2B, TH'D. THRU 2 PLACES
R.250
-1
-2
SCALE 3.000
-2 BOTTOM CAP
MAT'L: 7075-T6 AL ALLOY
NOTES:
1. BREAK ALL SHARP EDGES.
C'BORE Ø.625 X .320 DP. 2 PLACES
.500 (REF)
Ø.625(REF)
.100
.200
-1 LOCK FITTING MOUNTING BRACKET
MAT'L: 7075-T6 AL ALLOY
SCALE 3.000
REVISIONS
ZONE REV DESCRIPTION DATE APPROVED
PARTS LIST
NATIONAL AERONAUTICS & SPACE ADMINISTRATION
LANGLEY RESEARCH CENTER
HAMPTON, VA 23681-0001
DEPLOYABLE LIDAR TELESCOPE PROJECT
LOCK FITTING MOUNTING BRACKET & END CAP
LINEAR LATCH JOINT
J E PHELPS 6-9-98
63
D 1168482 -
SCALE 4/1 SHEET 1 OF 1

REVISIONS				
ZONE	LTR	DESCRIPTION	DATE	APPROVED

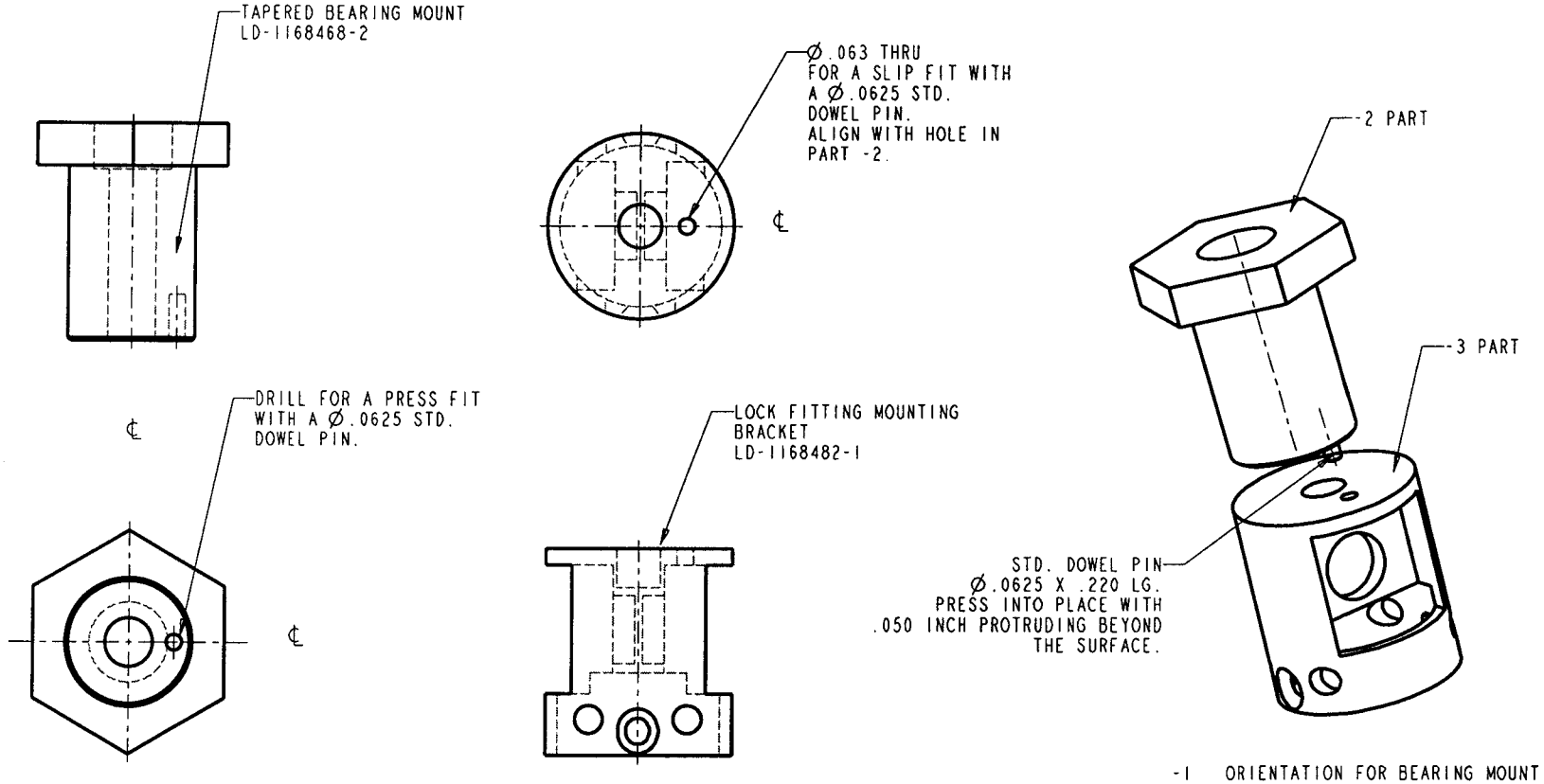

-2 BEARING MOUNT MOD.

-3 LOCK FITTING MOUNTING BRACKET MOD.

-1 ORIENTATION FOR BEARING MOUNT AND LOCK FITTING ASEMBLY

-3 QTY REQD	-1 QTY REQD	CAGE CODE	PART OR IDENTIFYING NUMBER	NOMENCLATURE OR DESCRIPTION	MATERIAL SPECIFICATION	ITEM NO.
						1

PARTS

PART DASH NO.	NEXT OTY REQD PER ASSY	FINAL	NEXT ASSY	USED ON
			APPLICATION	

UNLESS OTHERWISE SPECIFIED DIMENSIONS ARE IN INCHES
TOLERANCES
DECIMALS .XX ± .03 .XXX ± .010 ANGULAR .X ± .5°
DO NOT SCALE DRAWING

TREATMENT

FINISH

SIMILAR TO

SPECIAL MARKING SYM

CONTRACT NO

APPROVAL	DATE
DRAWN J E PHELPS	7-26-98
CHECKED	
DESIGNED	
LEAD ENGR	
BRANCH	

NATIONAL AERONAUTICS & SPACE ADMINISTRATION
LANGLEY RESEARCH CENTER
HAMPTON, VIRGINIA 23681-0001

TITLE DEPLOYABLE LIDAR TELESCOPE PROJECT
BEARING MOUNT AND LOCK FITTING MOD

SIZE	CAGE CODE	DWG NO.	REV.
C	25305	1168498	-

SCALE 2/1 SHEET 1 OF 1

CAGE CODE 25305 DWG NO - SH 1 REV -

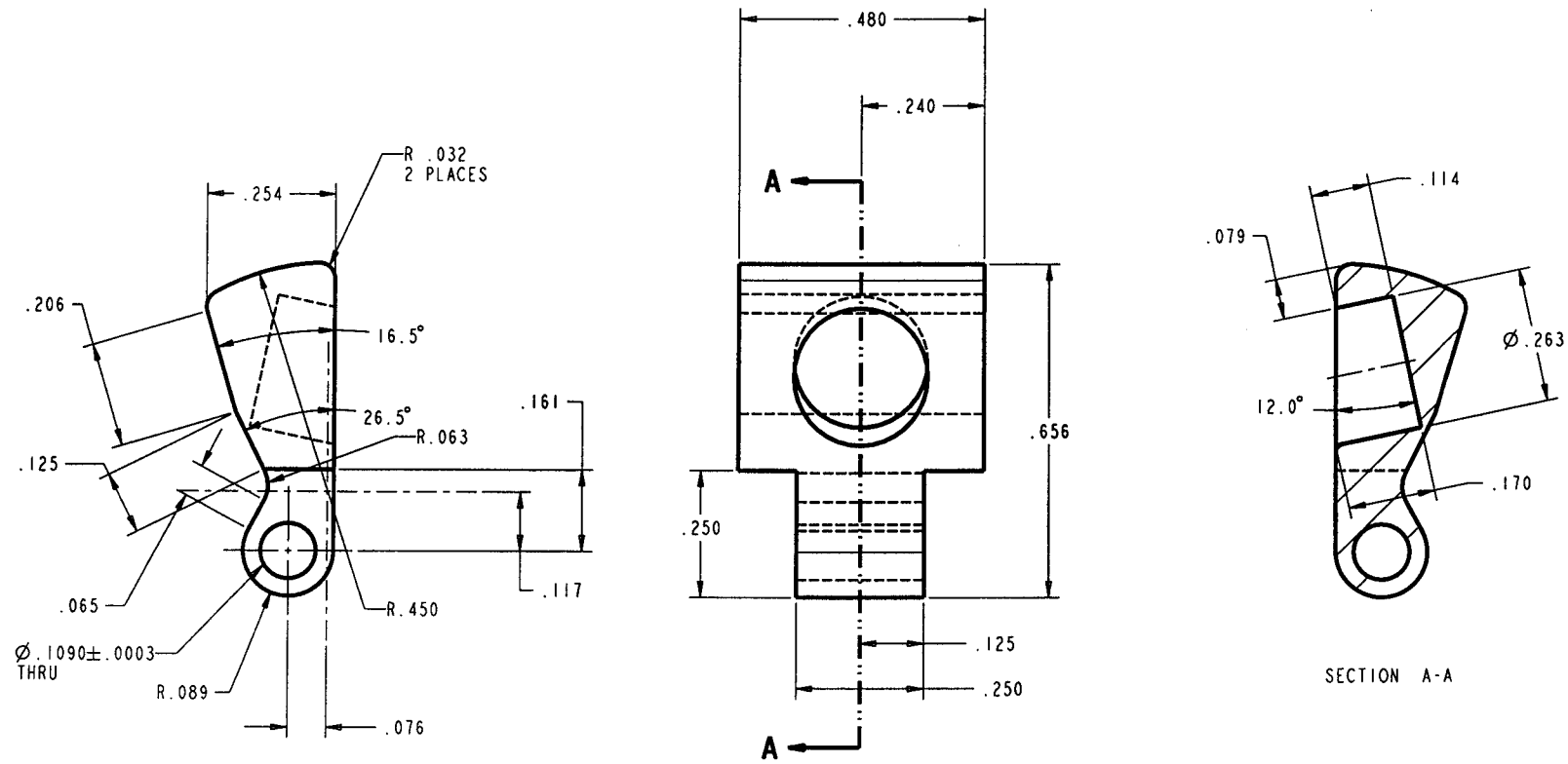

-1 LOCK FITTING
(NEW RADIUS .450)
MAT'L: 7075-T6 AL ALLOY

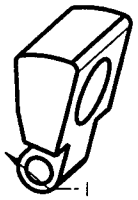

SCALE 3.000

NOTES:
1. BREAK ALL SHARP EDGES.

REVISIONS				
ZONE	LTR	DESCRIPTION	DATE	APPROVED

-3 QTY REQD	-1	CAGE CODE	PART OR IDENTIFYING NUMBER	NOMENCLATURE OR DESCRIPTION	MATERIAL SPECIFICATION	ITEM NO.
						1

PARTS

PART DASH NO.	NEXT	FINAL	NEXT ASSY	USED ON
	QTY REQD PER ASSY		APPLICATION	

UNLESS OTHERWISE SPECIFIED DIMENSIONS ARE IN INCHES
TOLERANCES
DECIMALS .XX ± .03 .XXX ± .010 ANGULAR .X ± .5°
DO NOT SCALE DRAWING

TREATMENT

FINISH 63

SIMILAR TO

SPECIAL MARKING SYM

CONTRACT NO.

	APPROVAL	DATE
DRAWN	J E PHELPS	9-22-98
CHECKED		
REVIEWED		
STRS ENGR.		
BRANCH		

NATIONAL AERONAUTICS & SPACE ADMINISTRATION
LANGLEY RESEARCH CENTER
HAMPTON, VIRGINIA 23681-0001

TITLE DEPLOYABLE LIDAR TELESCOPE PROJECT
LUG LATCH HALF - LINEAR LATCH

SIZE	CAGE CODE	DWG NO.	REV.
C	25305	1168506	-

SCALE 6/1 SHEET 1 OF 1

CAGE CODE 25305 DWG NO SH 1 REV -

REVISIONS				
ZONE	LTR	DESCRIPTION	DATE	APPROVED

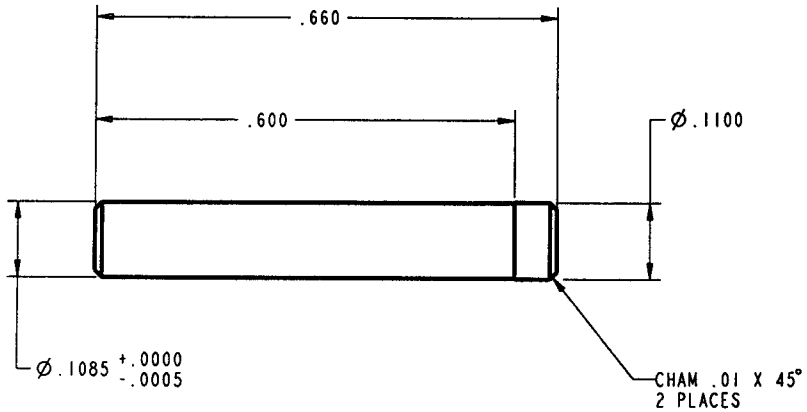

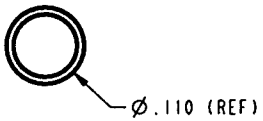

-1 SHAFT
(USE WITH LOCK FITTING)
MAT'L: 416 CRES.

NOTES:

1. BREAK ALL SHARP EDGES.

-3 QTY REQD	-1 QTY REQD	CAGE CODE	PART OR IDENTIFYING NUMBER	NOMENCLATURE OR DESCRIPTION	MATERIAL SPECIFICATION	ITEM NO.
						1

PARTS

PART DASH NO.	NEXT QTY REQD PER ASSY	FINAL	NEXT ASSY	USED ON
			APPLICATION	

UNLESS OTHERWISE SPECIFIED DIMENSIONS ARE IN INCHES
TOLERANCES
DECIMALS .XX ± .03 .XXX ± .010
ANGULAR .X ± .5°
DO NOT SCALE DRAWING

TREATMENT
FINISH 63
SIMILAR TO
SPECIAL MARKING STD

CONTRACT NO.

	APPROVAL	DATE
DRAWN	J E PHELPS	6-12-98
CHECKED		
DESIGNER		
LEAD ENGR.		
BRANCH		

NATIONAL AERONAUTICS & SPACE ADMINISTRATION
LANGLEY RESEARCH CENTER
HAMPTON, VIRGINIA 23681-0001

TITLE DEPLOYABLE LIDAR TELESCOPE PROJECT
SHAFT NEW - LOCK FITTING

SIZE	CAGE CODE	DWG NO.	REV.
C	25305	1168484	-

SCALE 5/1 SHEET 1 OF 1

CAGE CODE 25305 DWG NO 1168484 SH 1 REV -

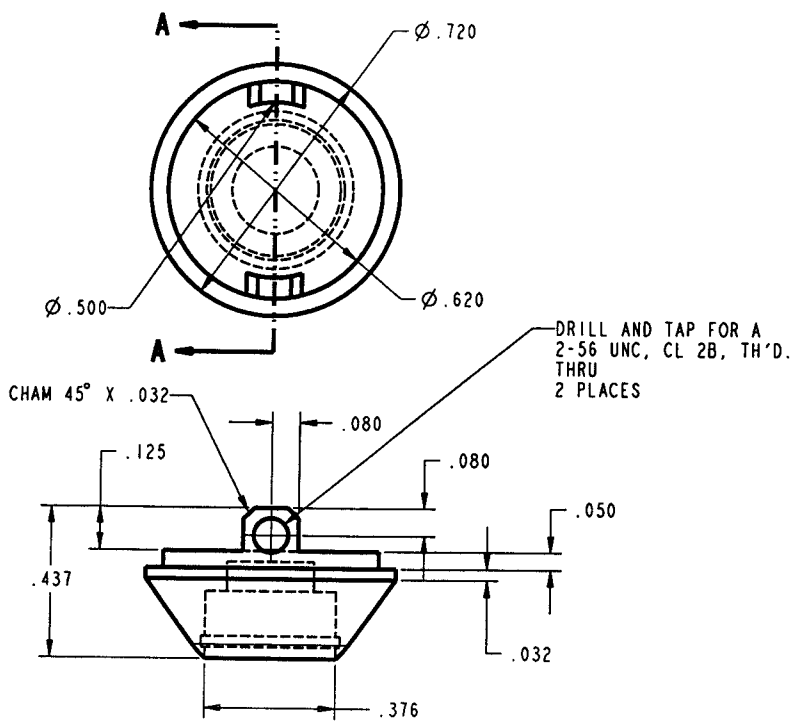

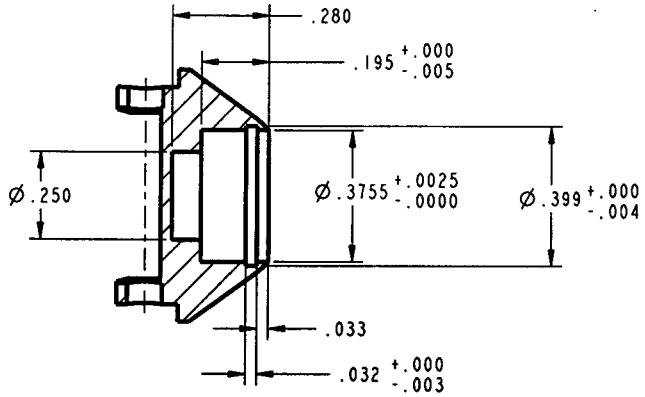

SECTION A-A

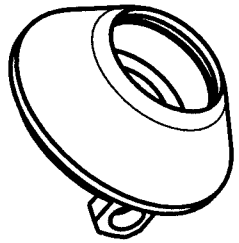

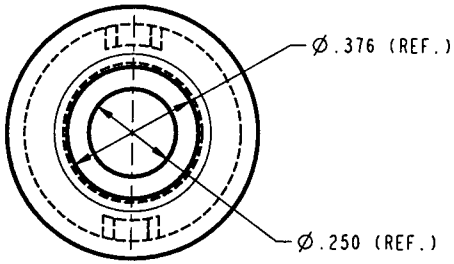

-1 BOTTOM BEARING CAP
MAT'L: 7075-T6 AL

NOTES:
1. BREAK ALL SHARP EDGES.

REVISIONS				
ZONE	LTR	DESCRIPTION	DATE	APPROVED

-2 QTY REQD	-1 QTY REQD	CAGE CODE	PART OR IDENTIFYING NUMBER	NOMENCLATURE OR DESCRIPTION	MATERIAL SPECIFICATION	ITEM NO.
						1

PARTS

PART DASH NO.	NEXT QTY REQD PER ASSY	FINAL	NEXT ASSY	USED ON
			APPLICATION	

UNLESS OTHERWISE SPECIFIED DIMENSIONS ARE IN INCHES
TOLERANCES
DECIMALS ± ANGULAR
.XX ± .03 .X ± .5°
.XXX ± .10
DO NOT SCALE DRAWING

TREATMENT
FINISH 63
SIMILAR TO
SPECIAL MARKING STD

CONTRACT NO.

APPROVAL	DATE
DRAWN J E PHELPS	6-29-98
CHECKED	
DESIGNER	
LEAD ENGR.	
BRANCH	

NATIONAL AERONAUTICS & SPACE ADMINISTRATION
LANGLEY RESEARCH CENTER
HAMPTON, VIRGINIA 23681-0001

TITLE DEPLOYABLE LIDAR TELESCOPE PROJECT
END CAP BEARING - LOCK BRACKET

SIZE C | CAGE CODE 25305 | DWG NO. 1168499 | REV. -

SCALE 4/1 | SHEET 1 OF 1

CAGE CODE 25305 | DWG NO | SH 1 | REV -

REPORT DOCUMENTATION PAGE

Form Approved
OMB No. 0704-0188

1. AGENCY USE ONLY (Leave blank)

2. REPORT DATE
August 1999

3. REPORT TYPE AND DATES COVERED
Contractor Report

4. TITLE AND SUBTITLE
Fabrication and Assembly of High-Precision Hinge and Latch Joints for Deployable Optical Instruments

5. FUNDING NUMBERS
632-10-14

NAS1-96013 (Task GK-14)

6. AUTHOR(S)
James E. Phelps

7. PERFORMING ORGANIZATION NAME(S) AND ADDRESS(ES)
Nyma/ADF
1224 N. Wright Street
Mail Stop 186A
Hampton, VA 23681-2199

8. PERFORMING ORGANIZATION REPORT NUMBER

9. SPONSORING/MONITORING AGENCY NAME(S) AND ADDRESS(ES)
National Aeronautics and Space Administration
Langley Research Center
Hampton, VA 23681-2199

10. SPONSORING/MONITORING AGENCY REPORT NUMBER
NASA/CR-1999-209117

11. SUPPLEMENTARY NOTES
Langley Technical Monitor: Mark S. Lake

12a. DISTRIBUTION/AVAILABILITY STATEMENT
Unclassified-Unlimited
Subject Category 37 Distribution: Nonstandard
Availability: NASA CASI (301) 621-0390

12b. DISTRIBUTION CODE

13. ABSTRACT (Maximum 200 words)
Descriptions are presented of high-precision hinge and latch joints that have been co-developed, for application to deployable optical instruments, by NASA Langley Research Center and Nyma/ADF. Page-sized versions of engineering drawings are included in two appendices to describe all mechanical components of both joints. Procedures for assembling the mechanical components of both joints are also presented. The information herein is intended to facilitate the fabrication and assembly of the high-precision hinge and latch joints, and enable the incorporation of these joints into the design of deployable optical instrument systems.

14. SUBJECT TERMS
precision deployment, hinge joint, latch joint, deployable structures, fabrication, space telescopes, optical instruments, microdynamics

15. NUMBER OF PAGES
26

16. PRICE CODE
A03

17. SECURITY CLASSIFICATION OF REPORT
Unclassified

18. SECURITY CLASSIFICATION OF THIS PAGE
Unclassified

19. SECURITY CLASSIFICATION OF ABSTRACT
Unclassified

20. LIMITATION OF ABSTRACT
UL