NASA Technical Memorandum 107646

DATA REDUCTION FORMULAS FOR THE 16-FOOT TRANSONIC TUNNEL NASA LANGLEY RESEARCH CENTER

REVISION 2

Charles E. Mercer

Bobby L. Berrier

Francis J. Capone

Alan M. Grayston

JULY 1992

National Aeronautics and
Space Administration

Langley Research Center
Hampton, Virginia 23665-5225

CONTENTS

APPENDIXES

INTRODUCTION

This document describes the Langley Research Center 16-Foot Transonic Tunnel standard set of equations. The engineering units necessary for these equations are computed on site from the raw data millivolts or counts. These quantities with additional constants are used as input to the program for computing the forces and moments and the various coefficients.

This document supersedes NASA Technical Memorandum 86319, Computations for the 16-Foot Transonic Tunnel, Revision 1, January, 1987.

This document is intended to be a companion document to NASA Technical Memorandum 102750, A User's Guide to the Langley 16-Foot Transonic Tunnel, Revision 1, September 1990.

The equations are grouped into modules, so that only the required modules need be used. The modules are as follows:

A. Wind Tunnel Parameters
B. Jet Exhaust Measurements
C. Skin Friction Drag
D. Balance Loads and Model Attitudes
E. Internal Drag (or Exit-Flow Distributions)
F. Pressure Coefficients and Integrated Forces
G. Thrust Removal Options
H. Turboprop Options
I. Inlet Distortion

Individual customizing of these equations for a specific job application is permitted through the use of code constants. These equations do not cover all

possible jobs; however, they are coded so that modifications of selected equations may be easily carried out.

The format of this document is arranged so that the module designations correspond to the Appendix designations in which the respective calculations equations are given.

WIND TUNNEL PARAMETERS

The wind tunnel parameters are computed from the required static and total pressure measurements. The Reynolds number, dynamic pressure and tunnel total temperatures are computed. When the tunnel Mach number is computed, a polynomial fit from the 1990 wind tunnel calibration is used to correct the ratio of static pressure to total pressure used in the Mach number calculation. These wind tunnel parameters are stored for use by other modules. Refer to Appendix A for calculations.

JET EXHAUST MEASUREMENTS

Jet exhaust information is calculated for the primary, secondary and tertiary flow conditions.

The primary flow conditions for each engine, up to a maximum of four, are calculated. The various parameters that are computed are mass flow and ideal thrust for each engine. The average nozzle pressure ratio and average total temperature over all the engines is obtained. The total mass flow is derived from chamber, flowmeter, and/or venturi measurements. Discharge coefficients for the total system are computed as well as the ideal thrust. For the primary flows, a dual air supply system is used in providing inputs for the mass flow parameters.

For the secondary and tertiary flows, the mass flows and other parameters are computed. Refer to Appendix B for calculations.

SKIN FRICTION DRAG

The skin friction drag for the model is computed in addition to any empennage skin friction drag. Refer to Appendix C for calculations. Information from the wind tunnel parameters is used. Drag from the various components as well as total drag is computed.

BALANCE LOAD AND MODEL ATTITUDES

The balance computations for the force and moment coefficients for up to five balances may be computed from this module. Allowances for the method of attaching the balances are made. The measured forces and moments are corrected for balance interactions. Then an allowance is made for high order interactions and momentum tares. The forces and moments are rotated to the desired axis and the final correct coefficients are computed as well as the angle of attack and sideslip angles. Refer to Appendix D for calculations.

INTERNAL DRAG

The internal drag and various forces on the engines are computed using the equations given in Appendix E. The result of these computations are used in the balance computations of module D to correct the force measured by the balances.

PRESSURE COEFFICIENTS AND INTEGRATED FORCES

Pressure coefficients are computed by using the equations given in Appendix F. Various integrated forces due to the pressures are calculated including hinge moment coefficients.

THRUST REMOVAL

Various thrust removal coefficients may be computed according to specified flags which specify the model setup. Various configurations are permitted which may include two balances. Reference Appendix G for calculations.

TURBOPROP OPTIONS

The drag and thrust coefficients due to the propeller and jet engine are computed as well as the combined totals. Horsepower and efficiency of the engines are derived with other quantities. Reference Appendix H for calculations.

INLET DISTORTION

Inlet engine face pressure distortion and mass flow rates are computed by using the equations given in Appendix I. Various profiles or gradient across the engine face which result from the airstream entering into the inlet are determined from the measured pressures and calculated ratios.

APPENDIX A

APPENDIX A

Tunnel Parameters

MODULE A TUNNEL PARAMETERS

SYMBOL	NOMENCLATURE
MACH	Free stream Mach number.
MCODE	Mach number calculation code.
	=1, PTANKG and PTH are needed.
	=2, PTANKH and PTH are needed.
	=3, PTANKG and PTG are needed.
	=4, PTANKH and PTG are needed.
	=5, PTKSON and PTSON are needed.
PO	Tunnel static pressure, lbs/sq. in.
PO/PTO	Ratio of tunnel static pressure to total pressure.
PTANKG	Tunnel tank pressure measured by gage, lbs/sq. in.
PTANKH	Tunnel tank pressure measured by Ruska, lbs/sq. in.
PTG	Tunnel total pressure measured by gage, lbs/sq. in.
PTH	Tunnel total pressure measured by Ruska, lbs/sq. in.
PTKSON	Tunnel tank pressure measured by Digiquartz, lbs./sq. in.
PTO	Tunnel total pressure, lbs/sq. in.
PTSON	Tunnel total pressure measured by sonar manometer, lbs/sq. in.
QO	Dynamic pressure, lbs/sq. in.
REFL	Reference length, feet.
RN	Reynolds number based on reference length.
RN/FT	Reynolds number per foot.
RT(J)	Tunnel total temperature measurements, °F, where J = probe number.

SYMBOL	NOMENCLATURE
T(J)	Constants required from project engineer, where J = probe number. If probe is bad or does not exist, then its value should be set to 0.0. If no correction is made to the temperature probe, then its value should be set to 1.0.
TTO	Tunnel total temperature, °F.

APPENDIX A

Module A

Tunnel Parameters

A. Required Constants

1. MCODE (default value = 2) must be provided if values other than PTANKH and PTH are used to compute Mach number.
2. The constants used in determining tunnel total temperature are T2, T3, T4 and T5 which must equal 0.0 or 1.0.

   One-tunnel temperature measurement

   $T2 = 1.0, T3 = T4 = T5 = 0.0$ (Eq. A-1)

   Two-tunnel temperature measurements

   $T2 = T3 = 1.0, T4 = T5, = 0.0$ (Eq. A-2)

   Note that the numbers 2 through 5 correspond to resistance thermometer numbers normally used.
3. A reference model length, REFL, must be given in units of feet to compute model Reynolds number.

B. Atmospheric Pressure

Atmospheric pressure calculation may be handled in the standard program for quantities. Its inclusion (if required) and method of obtaining (dialed-in optional digital channel or measured by gage in analog channel) is left optional to the project engineer. However, measuring atmospheric pressure with a gage is recommended rather than entering this pressure reading into an analog channel since it is possible for significant variations to occur during the course of a tunnel run.

C. Mach Number

1. MCODE indicates which measurements are to be used for Mach number calculation (see nomenclature on page A-1). The default value of MCODE is 2. Multiple options are provided to allow for the possibility of instrument failure during a test. If the digital MCODE input is 1 to 5, then digital value overrides the C-card value. If the digital value is zero, then the "C" value overrides. The reference pressures may also change.

If MCODE = 1

PO/PTO = F(PTANKG/PTH) (Eq. A-3)

If MCODE = 2

PO/PTO = F(PTANKH/PTH) (Eq. A-4)

If MCODE = 3

PO/PTO = F(PTANKG/PTG) (Eq. A-5)

If MCODE = 4

PO/PTO = F(PTANKH/PTG) (Eq. A-6)

If MCODE = 5

PO/PTO = F(PTKSON/PTSON) (Eq. A-7)

where F(•) is the fitted polynomial from the 1990 calibration

D. Tunnel Static Pressure

PO calculation automatically depends on MCODE. No input is required from the project engineer. The normal procedure (internal constant MCODE = 2) uses PTH for computation.

If MCODE ≤ 2

$$PO = (PO/PTO)PTH \qquad \text{(Eq. A-9)}$$

If MCODE = 3 or 4

$$PO = (PO/PTO)PTG \qquad \text{(Eq. A-10)}$$

If MCODE = 5

$$PO = (PO/PTO)PTSON \qquad \text{(Eq. A-11)}$$

E. <u>Tunnel Total Pressure</u>

PTO to calculation automatically depends on MCODE. No input is required from the project engineer. The normal procedure (MCODE = 2) uses PTH.

If MCODE ≤ 2

$$PTO = PTH \qquad \text{(Eq. A-12)}$$

If MCODE = 3 or 4

$$PTO = PTG \qquad \text{(Eq. A-13)}$$

If MCODE = 5

$$PTO = PTSON \qquad \text{(Eq. A-14)}$$

F. <u>Tunnel Dynamic Pressure</u>

Tunnel dynamic pressure is computed as follows:

If MACH < .1

$$QO = PO \qquad \text{(Eq. A-15)}$$

If MACH $\geq .1$

$$QO = 0.7 * PO * MACH^2 \qquad \text{(Eq. A-16)}$$

G. Dew Point

Dew point calculation may be handled in the standard program for quantities. Its inclusion, channel location, and name are left optional to the project engineer.

H. Tunnel Total Temperature

1. Provision is made for four individual tunnel total temperature measurements. They may be either thermocouples or resistance thermometers; however, the appropriate equation must be specified for the standard program for quantities. Note that resistance thermometer one (1) (strut head) should not be used. If resistance thermometers are used, their calibrations are included internal to the program.

2. The constants required from the project engineer are T2, T3, T4, and T5 (0.0 or 1.0).

$$TTO = \frac{(RT2 * T2) + (RT3 * T3) + (RT4 * T4) + (RT5 * T5)}{T2 + T3 + T4 + T5} \qquad \text{(Eq. A-17)}$$

I. Reynolds Number

1. The constant required from the project engineer is REFL.

$$RN/FT = \frac{1.81193 * 10^{8} * PTO * MACH\left(TTO + 658.27 + 39.72\ MACH^{2}\right)}{(TTO + 459.67)^{2}\left(1 + 0.2\ MACH^{2}\right)^{5/2}}$$

(Eq.A-18)

RN = RN/FT * REFL (Eq. A-19)

The derivation of the formulas in Appendix A can be found in Ames Research Staff, Equations, Tables, and Charts for compressible flow, NACA Report 1135 (1953).

APPENDIX B

APPENDIX B

Jet Exhaust Measurements

MODULE B JET EXHAUST MEASUREMENTS

SYMBOL	NOMENCLATURE
AENG(I)	Flow area to be used for determining each engine mass-flow rate from plenum chamber measurements, where I = engine number. This area is generally based on the area of the plenum orifice nozzles (AENG(I) = (orifice area)/2 for twin engines), sq. in.
AREF	Model reference area used for coefficients, sq. in.
AT(I)	Throat area of each engine, where I = engine number, sq. in.
AVRI(L)	Area of throat of in-line (not MCV) venturi, where L = venturi number, sq. in.
C*	Critical area, sq. in.
CDSI(L)	Discharge coefficient, where L = venturi number.
CFI(M)	Ideal thrust coefficient based on mass-flow rate, where M = air system.
CFICHR(M)	Ideal thrust coefficient based on mass-flow rate obtained from plenum chamber measurements, where M = air system.
FI(M)	Ideal thrust of total primary exhaust system based on measured mass-flow rate, lbs., where M = air system.
FICHR(M)	Ideal thrust of total primary exhaust system based on mass-flow rate obtained from plenum chamber measurements, lbs., where M = air system.
FIENG(I)	Ideal thrust of individual engines (where I = engine number (up to 4)) based on mass-flow rate obtained from individual plenum chamber measurements, lbs.

SYMBOL	NOMENCLATURE
FM(M)	Primary exhaust flow air flowmeter frequency, hertz, where M = air system.
FMS	Secondary flow air flowmeter frequency, hertz.
g	Acceleration due to gravity, 32.174 feet per second
GAMJ	Ratio of specific heats for primary exhaust flow.
IAIR(I)	Air system for each engine, where I = engine number. Must be 1 or 2, default = 0.
ICH(I)	Intercept to be used for determining each engine mass-flow rate from plenum chamber measurements, where I = engine number.
INTFM1(M)	Flowmeter number for primary flow air flowmeter, where M = air system.
INTFMS	Flowmeter number for secondary flow air flowmeter.
KAE(I)	Constant used in chamber mass-flow calculation, used if second order curve fit is required, where I = engine number.
KBL	If set to 1, tertiary flow computation is done. If set to 0, tertiary flow computation is omitted.
KCH(I)	Slope to be used for determining each engine mass-flow rate from plenum chamber measurements, where I = engine number.
KI1	Internally computed constant.
KI2	Internally computed constant.
KI3	Internally computed constant.
KJ1	Internally computed constant (function of GAMJ).
KJ2	Internally computed constant (function of GAMJ).
KJ3	Internally computed constant (function of GAMJ).
KJ4	Internally computed constant (function of GAMJ).

SYMBOL	NOMENCLATURE
KJ5	Internally computed constant (function of GAMJ).
NOTE:	**If no correction is to be made to the pressure probe, then its value is set to 1.0. If the probe is faulty or does not exist, then its value is set to 0.**
KPAV(I)	Constants used to determine average primary jet total pressure ratio from all engines, where I = engine number. These constants must equal 0.0 or 1.0. See note.
KPBL(J)	Constants used to determine average static pressure in tertiary duct, where J = probe number. Must equal 0.0 or 1.0. See note.
KPCH(I)	Break pressure for calculation of WPENG(I) for second order equations, lbs/sq. in.
KPS	Secondary flowmeter constant (Internally computed).
KPS(J)	Constants used to determine average static pressure in secondary air duct, where J = probe number. Must equal 0.0 or 1.0. See note.
KPT(I,J)	Constants used in computing jet total pressure, where I = engine number and J = probe number. These constants must equal 0.0 or 1.0. See note.
KPTBL(J)	Constants used to determine average total pressure in tertiary duct, where J = probe number. Must equal 0.0 or 1.0. See note.
KPTS(J)	Constants used to determine average total pressure in secondary air duct, where J = probe number. Must equal 0.0 or 1.0. See note.
KR(I,J)	Rake constant for each probe in each engine, where I = engine number and J = probe number. Must be equal to 0.0 or 1.0. See note.

SYMBOL	NOMENCLATURE
KSEC	If set to 1, secondary flow computation is done. If set to 0, secondary flow computation is omitted.
KSW(M)	Switch for chamber, venturi or flowmeter, where M = air system. = -1, Multiple Critical Venturi mass-flow calculation. = 0, Flowmeter mass-flow calculation. = 1, Chamber mass-flow calculation. = 2, In-line (not MCV) venturi mass-flow calculation.
KTAV(I)	Constants used to determine average primary jet total temperature from all engines, where I = engine number. These constants must equal 0.0 or 1.0. See note.
KTT(I,J)	Constants used in determining primary jet total temperature, where I = engine number and J = probe number. These constants must equal 0.0 or 1.0. See note.
KV	Venturi constant, used to account for different venturi calibrations. It includes venturi throat area and discharge coefficient.
KVA(J,M)	Constants used to determine average static pressure of multiple critical venturi, where J = probe number and M = air system.
KVARI(L)	Constants used in the computation of in-line (not MCV) venturi weight flow rate, where L = 1 to 4 represents values of Pt/P at A/A* of venturi to convert measured static pressure at throat to a total pressure and L = 5 to 8 represents averaging factors (must be 0.0 or 1.0).
MBLDOT	Ratio of tertiary weight flow to tertiary ideal weight flow
MCV(M)	Venturi meter number, where M = air system.

SYMBOL	NOMENCLATURE
MDOT(M)	Primary mass-flow rate as measured by flowmeter, slugs/sec., where M = air system.
MDOTCH	Primary mass-flow rate as computed from plenum chamber measurements, slugs/sec.
MSDOT	Secondary flow mass-flow rate, slugs/sec.
NPTE(I)	Number of total pressure probes in each engine, where I = engine number. (Internally computed).
NTTE(I)	Number of total temperature probes in each engine, where I = engine number. (Internally computed).
NUMENG	Number of engines in model (maximum of 4). NUMENG = 0 for aerodynamics model (no other constants required).
PBL(J)	Static pressure measurements in the tertiary duct (up to 4), where J = probe number, lbs/sq. in.
PBLAVE	Average static pressure in the tertiary duct, lbs/sq. in.
PCH(I)	Individual engine-plenum-chamber total pressure, I = engine number, lbs/sq. in.
PCHOKE	Primary jet-total-pressure ratio for choked flow.
PFM(M)	Pressure measured at primary flow flowmeter, lbs/sq. in., where M = air system.
PFMS	Pressure measured at secondary flow flowmeter, lbs/sq. in.
PS(J)	Static pressure measurements in the secondary flow duct (up to 4), where J = probe number, lbs/sq. in.
PSEC	Average static pressure in the secondary flow duct, lbs/sq. in.
PTBL(J)	Total pressure measurements in the tertiary duct (up to 4), where J = probe number, lbs/sq. in.
PTBLAV	Average total pressure in the teritary duct, lbs/sq. in.

SYMBOL	NOMENCLATURE
PTB/PTJ	Ratio of tertiary total pressure to primary jet total pressure.
PTB/PTO	Ratio of tertiary total pressure to free-stream total pressure.
PTENG(I)	Average primary jet total pressure in each engine, where I = engine number, lbs/sq. in.
PTENG(I)/PO	Ratio of average primary jet total pressure in each engine to tunnel static pressure, where I = engine number.
PTENGO(I)	Ratio of average primary jet total pressure in each engine to tunnel static pressure, where I = engine number.
PTJ(I,J)	Individual primary jet total pressure measurements, where I = engine number and J = probe number, lbs/sq. in.
PTJ/PO(M)	Average primary jet total pressure ratio (all engines), where M = air system.
PTS(J)	Total pressure measurements in the secondary flow duct, where J = probe number, lbs/sq. in.
PTS/PTJ	Ratio of secondary flow total pressure to primary jet total pressure.
PTS/PTO	Ratio of secondary flow total pressure to free-stream total pressure.
PTSEC	Average total pressure in the secondary flow duct, lbs/sq. in.
PTV	Tertiary venturi total pressure, lbs/sq. in.
PV	Tertiary venturi static pressure, lbs/sq. in.
PV1	Averaged multiple critical venturi static pressure upstream of venturi throat, lbs/sq. in.
PV2	Averaged multiple critical venturi static pressure downstream of venturi throat, lbs/sq. in.
PV/PTV	Ratio of tertiary venturi static pressure to tertiary total pressure.

SYMBOL	NOMENCLATURE
PVEN(I,M)	Multiple critical static pressure, where I = 1 and 3 are upstream and I = 2 and 4 are downstream of venturi throat, lbs/sq. in., where M = air system.
PVRI(L,M)	In-line (not MCV) venturi static pressure, lbs/sq. in., where L = venturi number and M = air system.
RDUCT	Venturi throat Reynolds number
RJ	Gas constant for primary flow, ft/degree Rankine.
RNMCV(M)	Venturi Reynolds number, where M = air system
RS	Gas constant for secondary flow, ft/degree Rankine.
RV	Gas constant for tertiary flow, ft/degree Rankine.
TCH(I)	Individual engine-plenum chamber total temperature, I = engine number, °F.
TFM(M)	Temperature at primary flowmeter, °F, where M = air system.
TFMS	Temperature at secondary flowmeter, °F.
THETBL	Tertiary flow corrected mass-flow ratio.
THETSE	Secondary flow corrected mass-flow ratio.
TTBL	Total temperature of tertiary flow, °F.
TTENG(I)	Average primary jet total temperature in each engine where I = engine number, °F.
TTJ(I,J)	Individual primary jet total temperature measurements where I = engine number and J = probe number, °F.
TTJAVG(M)	Average primary jet total temperature (all engines), °F, where M = air system.
TTSEC	Secondary flow total temperature, °F.
TTV	Temperature at the tertiary venturi, °F.
TV(M)	Multiple critical venturi temperature, °F, where M = air system.

SYMBOL	NOMENCLATURE
TVRI(L,M)	Temperature at the in-line (not MCV) venturi, where L = venturi number, °F, and M = air system number.
VIS	Free-stream viscosity, lb. sec./sq. ft.
VRATIO(M)	Ratio of multiple critical venturi static pressures (should be less than 0.93), where M = air system number.
WI(M)	Ideal weight flow of primary flow, lbs/sec., where M = air system number.
WIBL	Ideal weight flow of tertiary flow, lbs/sec.
WIENG(I)	Ideal weight flow of each individual engine primary flow, where I = engine number, lbs/sec.
WMCV(M)	Multiple critical venturi weight flow rate, lbs/sec., where M = air system.
WMCV/WI(M)	Ratio of multiple critical venturi weight flow rate to ideal weight flow rate, where M = air system.
WP(M)	Measured weight flow of air primary flow flowmeter or venturi, lbs/sec., where M = air system.
WPBL	Tertiary weight flow rate obtained from venturi, lbs/sec.
WPCHR(M)	Total primary flow weight flow rate obtained from plenum chamber measurements, lbs/sec, where M = air system.
WPCHR/WI(M)	Discharge coefficient of total primary flow system as obtained from plenum chamber measurements for entire system, where M = air system number.
WPENG(I)	Primary flow weight flow rate of each engine obtained from plenum-chamber measurements, where I = engine number, lbs/sec.
WPSEC	Secondary flow weight flow rate, lbs/sec.

SYMBOL	NOMENCLATURE
WP/WI(M)	Primary flow discharge coefficient using flowmeter or venturi weight flow rate for entire system, where M = air system.
WPE/WIE(I)	Discharge coefficient of each individual engine as obtained from plenum-chamber measurements, where I = engine number.
WPVRI(M)	Sum of in-line (not MCV) venturi weight flow rates, lbs/sec., where M = air system.
WPVRI/WI(M)	Ratio of summation of in-line (not MCV) venturi weight flow rate to ideal weight flow rate, where M = air system.
WVRI(L,M)	In-line (not MCV) venturi weight flow rate, lbs/sec., where L = venturi number, and M = air system.
Z	Primary flowmeter constant. (Internally computed).
ZS	Secondary flowmeter constant. (Internally computed).

APPENDIX B

Module B

Jet Exhaust Measurements

A. Required Constants

1. All constants are initialized to a value of zero. The project engineer needs to supply only those constants which are required for the quantities to be computed. In addition, by logical use of combinations of these constants, several options are available to the project engineer. One of these options is discussed later.
2. NUMENG - number of engines in model. NUMENG = 0 for aerodynamics model (no other constants are required).
3. KR(I,J) -Rake constant for each probe in each engine, where I = engine number and J = probe number.

If no correction is to be made to the total pressure probe, then its value is set equal to 1.0. If the probe is faulty or does not exist, then its value is set equal to 0.0.

Example: Two engines; five probes in the first, and three probes in the second.

Engine 1 is corrected to integrated rake values, engine 2 probes are uncorrected.

KR(1,1) = 1.051

KR(1,2) = .986

KR(1,3) = .972

KR(1,4) = .987

KR(1,5) = 1.058

KR(2,1) = 1.0

KR(2,2) = 1.0

KR(2,3) = 1.0

Note that there is no need to supply those constants which equal zero since they are assumed to be zero if not supplied.

4. Special Case: A twin-engine configuration with only one set of chamber measurements is not uncommon. The following constants are used.

   NUMENG = 2

   AENG(1) = total orifice nozzle area

   AENG(2) = 0.0

   This combination of constants yields the following, nonstandard, results:

   WPENG(1) = total weight flow based on pressure and temperature measurements of engine 1.

   WPENG(2) = 0.0

   WPE/WIE(1) and WPE/WIE(2) are meaningless

   FIENG(1) = total ideal thrust based on pressure and temperature measurements of engine 1.

   FIENG(2) = 0.0

   WPCHR, MDOTCH, WPCHR/WI, FICHR, and CFICHR are based on pressure and temperature measurements in engine 1 rather than on the average values of both engines.

B. <u>Test for Exhaust Model</u>

1. The constant required from the project engineer is NUMENG (0 to 4).

IF NUMENG = 0, skip module B.

C. <u>Compute Common Constants</u>

1. The constants required from the project engineer are GAMJ and RJ.

$$KJ2 = \frac{GAMJ * 64.348}{(GAMJ - 1)RJ}$$

(Eq. B-1)

$$KJ3 = \sqrt{\frac{2 * (GAMJ) * (RJ)}{(GAMJ - 1) * 32.174}}$$

(Eq. B-2)

$$KJ4 = \sqrt{\frac{GAMJ - 1}{GAMJ}}$$

(Eq. B-3)

$$KJ5 = \frac{1}{GAMJ}$$

(Eq. B-4)

$$PCHOKE = \left[1 + \left(\frac{GAMJ - 1}{2}\right)\right]^{\frac{GAMJ}{GAMJ-1}}$$

(Eq. B-5)

D. <u>Individual Engine Measurements</u>

1. This permits computation for four separate engines with the following instrumentation in each engine:

a. jet total pressures

b. jet total temperatures

c. chamber pressure

d. chamber temperature

2. Jet total pressure

a. Jet total pressure will always be called PTJ(I,J), where I = engine number and J = probe number.

b. An example of representing the third measurement (probe 3) of jet total pressure in engine 2 is named PTJ(2.3).

c. The constants required from the project engineer are KR(I,J) and KPT(I,J).

$$PTENG(I) = \frac{\sum_{J=1}^{NPTE(I)} PTJ(I,J) * KR(I,J)}{\sum_{J=1}^{NPTE(I)} KPT(I,J)}$$

(Eq. B-6)

$$PTENGO(I) = \frac{PTENG(I)}{PO}$$

(Eq. B-7)

3. Jet total temperature

a. Jet total temperature measurements are always called TTJ(I,J), where I = engine number and J = probe number.

b. An example of the first measurement (probe 1) of jet total temperature in engine 3 is named TTJ(3.1).

c. The constants required from the project engineer are KTT(I,J).

$$TTENG(I) = \frac{\sum_{J=1}^{NTTE(I)} TTJ(I,J) * KTT(I,J)}{\sum_{J=1}^{NTTE(I)} KTT(I,J)}$$

(Eq. B-8)

4. Chamber weight flow for each engine.

a. The constants required from the project engineer are KCH(I), ICH(I), KAE(I), AT(I), AENG(I) and KPCH(I).

$$KJ1 = 0.5316 + (PTENG(I) + 16.9)\,((1.581 - 0.00834(TTENG(I) - 60))/10^5)$$ [1] (Eq. B-9)

If PCH(I) < KPCH(I)

then

$$WPENG(I) = \frac{AENG(I) * PCH(I) * KJ1 * \left[ICH(I) + KCH(I) * PCH(I) + KAE(I) * PCH(I)^2 \right]}{\sqrt{TCH(I) + 459.67}}$$

If PCH(I) > KPCH(I) then

$$WPENG(I) = \frac{AENG(I) * PCH(I) * KJ1 * \left[ICH(I+4) + KCH(I+4) * PCH(I) + KAE(I+4) * PCH(I)^2 \right]}{\sqrt{TCH(I) + 459.67}}$$

(Eq. B-10)

---

[1] Reimer, Robert M.: Computation of the Critical Flow Function, Pressure Ratio, and Temperature Ratio for Real Air ASME Paper 62-WA177 Journal of Basic Engineering, Trans. ASME

5. Ideal weight flow for each engine.
   a. The nozzle choke total pressure ratio is calculated internally and is called PCHOKE.
   b. The constant required from the project engineer is AT(I).

If PTENGO(I) is greater than PCHOKE, use equation B-11.

$$\mathrm{WIENG(I)} = \frac{[\mathrm{KJ1}] * [\mathrm{PTENG(I)}] * [\mathrm{AT(1)}]}{\sqrt{\mathrm{TTENG(I)} + 459.67}}$$

(Eq. B-11)

If PTENGO(I) is less than or equal to PCHOKE, use equation B-12.

$$\mathrm{KI1} = \frac{\mathrm{KJ2}}{(\mathrm{TTENG(I)} + 459.67)} \left[1 - \left(\frac{1}{\mathrm{PTENGO(I)}} \right)^{\mathrm{KJ4}} \right]$$

(Eq. B-12)

If KI1 is less than 0, KI1 = .0001

then

$$\mathrm{WIENG(I)} = \sqrt{\mathrm{KI1}} * \mathrm{AT(I)} * \mathrm{PTENG(I)} * \left(\frac{1}{\mathrm{PTENGO(I)}} \right)^{\mathrm{KJ5}}$$

(Eq. B-13)

<u>Note to the project engineer</u>: If the engine is shrouded, then a local static pressure in the nozzle shroud should be used rather than PO. The engineer must supply a new equation for KI1 and WIENG(I).

6. Discharge coefficient for each engine based on chamber weight flow.

$$WPE / WIE(I) = \frac{WPENG(I)}{WIENG(I)}$$

(Eq. B-14)

If WIENG(I) = 0, WPE/WIE(I) = 0

7. Ideal thrust for each engine based on chamber weight flow.

$$KI2 = [TTENG(I) + 459.67] * \left[1 - \left(\frac{1}{PTENGO(I)}\right)^{KJ4}\right]$$

(Eq. B-15)

If KI2 is less than 0, KI2 = .0001

$$FIENG(I) = [KJ3] * [WPENG(I)] * \left[\sqrt{KI2}\right]$$

(Eq. B-16)

8. In-line venturi: weight flow for each Venturi, in each air system. The equations given below are for critical flow venturi and are intended to be very general.

Air system number = IAIR(I) = (M)

A(I) = {[VKRI(4,I) * (TVRI(L,M) + 459.67) + VKRI(3,I)] * (TVRI(L,M) + 459.67) + VKRI(2,I)} * (TVRI(L,M) + 459.67) + VKRI(1,I)

(Eq. B-17)

A(I) where I = 1 to 4 are constants which go into the compressibility term, C*. As seen, a 3rd order equation capability exists. Values of VKRI(1,I) to

VKRI(4,I) can be input using 'C' cards to allow use of most any critical venturi.

$$C^* = [(A(4) * PVRI(L,M) + A(3)) * PVRI(L,M) + A(2)] * PVRI(L,M) + A(1)$$

(Eq. B-18)

$$TS = (TVRI(L,M) + 459.67)/1.2$$

(Eq. B-19)

$$VIS = 6.086248 * 10^{-8} * (TS)^{1.5}/(TS + 198.6)$$

(Eq. B-20)

Individual venturi mass flow is then computed using

$$WVRI(L,M) = \frac{PVRI(L,M) * KVARI(L) * AVRI(L) * g * C^* * CDSI}{\sqrt{g * RJ * (TVRI(L,M) + 459.67)}}$$

(Eq. B-21)

<u>NOTE</u>: CDSI represents the discharge coefficient of individual venturi. It is obtained using an iterative scheme based on venturi throat Reynolds number. A table of CD versus RDUCT is required for each venturi. RDUCT is computed using

$$RDUCT = WVRI(L)/(AVRI(L) * VIS)$$

(Eq. B-22)

Because of the complexity of this computation, an example is included. The following information is contained within the data reduction program when using the twin critical venturis which measure total mass flow in the groundstand (B1234).

VKRI(4,1)= 0.0	VKRI(4,3) = 0.0
VKRI(3,1)= -1.43545E-8	VKRI(3,3) = 1.64438E-13
VKRI(2,1)= 1.36243E-5	VKRI(2,3) = -1.90568E-10
VKRI(1,1)= 0.68166	VKRI(1,3) = 5.4424E-8
VKRI(4,2)= 0.0	VKRI(4,4) = 0.0
VKRI(3,2)= 4.49456E-10	VKRI(3,4) = 0.0
VKRI(2,2)= -6.06496E-7	VKRI(2,4) = 0.0
VKRI(1,2)= 2.14835E-4	VKRI(1,4) = 0.0

KVARI(1) = 1.0040	AVRI(1) = .272009	KVARI(5) = 1.0
KVARI(2) = 1.0039	AVRI(2) = .264481	KVARI(6) = 1.0

Only the KVARI and AVRI constants are required to be input by an engineer. Both venturis use the same CD versus RDUCT relationship, which is not a table lookup but simply a second order equation. Of course a table lookup could be used in lieu of the equation.

The CDSI equation for twin critical venturis in groundstand:

$$CDSI = 0.993507 + 3.5062E\text{-}4*(RDUCT) - 1.1269E\text{-}5 * (RDUCT^2)$$

where RDUCT = WVRI(L,M)/(AVRI(L) * VIS * 1.0E06)

E. <u>Total Exhaust System Properties</u>

1. Average total pressure ratio.

   a. The constants required from the project engineer are KPAV(I) and IAIR(I).

      (M) = IAIR(I)

$$PTJ / PO(M) = \frac{\sum_{I=1}^{NUMENG} [KPAV(I) * PTENGO(I)]}{\sum_{I=1}^{NUMENG} KPAV(I)}$$

(Eq. B-23)

2. Average total temperature.

   a. The constants required from the project engineer are KTAV(I) and IAIR(I).

   (M) = IAIR(I)

$$TTJAVG(M) = \frac{\sum_{I=1}^{NUMENG} [KTAV(I) * TTENG(I)]}{\sum_{I=1}^{NUMENG} KTAV(I)}$$

(Eq. B-24)

3. Total weight or mass flow.

   a. Each air system weight flow is in units of lb/sec.

   b. Each air system mass flow is in units of slugs/sec.

   c. The constants required from the project engineer are:

      (1) INTFM1(M) and MCV(M), where M is air system number.

      (2) KSW selects mass flow computation

            = 1; chamber flow

            = 0; flowmeter

            =-1; multiple critical venturi

            = 2; in-line venturis

   If KSW = 1 (chamber mass flow calculation)

(M) = IAIR(I)

$$WPCHR(M) = \sum_{I=1}^{NUMENG} WPENG(I)$$

(Eq. B-25)

$$MDOTCH = \frac{WPCHR(M)}{32.174}$$

(Eq. B-26)

If KSW = 0 (air model with flowmeter)

Z and KP are determined from standardized flowmeter tables and from INTFM 1 (M) constant.

$$WP(M) = \frac{(FM1(M)) * (PFM(M) * (144.)}{(RJ) * (Z) * (KP) * (TFM(M) + 459.67)}$$

(Eq. B-27)

$$MDOT(M) = \frac{WP(M)}{32.174}$$

(Eq. B-28)

If KSW = -1 (venturi mass flow calculation), the multiple critical venturi code, MCV, is decoded to derive those venturi present

$$PV1 = \frac{KVA1 * PVEN(1,M) + KVA3 * PVEN(3,M)}{KVA1 + KVA3}$$

(Eq. B-29)

$$PV2 = \frac{KVA2 * PVEN(2,M) + KVA4 * PVEN(4,M)}{KVA2 + KVA4}$$

$$VRATIO(M) = \frac{PV2}{PV1}$$

(Eq. B-30)

$$A(I) = ((VK(4,I) * TV(M) + VK(3,I)) * TV(M) + VK(2,I)) * TV(M) + VK(1,I)$$

(Eq. B-31)

$$C^* = ((A(4) * PV1 + A(3)) * PV1 + A(2)) * PV1 + A(1)$$ (Eq. B-32)

$$TS = (TV(M) + 459.67)/1.2$$ (Eq. B-33)

$$VIS = 6.086248 * 10^{-8} * (TS)^{1.5}/(TS + 198.6)$$ (Eq. B-34)

$$WMCV(M) = \sum_{I} PV1 * AREAV(I) * (C*) * \left(\frac{32.174}{(TV(M) + 459.67)RJ}\right)^{1/2} * CD(I)$$

(Eq. B-35)

$$ARMCV = \sum_{I} AREAV(I)$$

(Eq. B-36)

The above summations are over the venturi present. CD(I) is computed by linear interpolation from a table of CD vs RNMCV

where

$$RNMCV(M) = WMCV(M)/(ARMCV*VIS)$$

(Eq. B-37)

An iterative scheme is used until successive computations of WMCV differ by a desired accuracy.

4. If KSW = 2 (in-line venturis)

$$WPVRI(M) = \sum_{L=1}^{4} WVRI(L,M) * KVARI(L+4)$$

(Eq. B-38)

5. Ideal weight flow (total).

   a. Ideal weight flow of each air system is computed

$$WI(M) = \sum_{I=1}^{NUMENG} WIENG(I)$$

(Eq. B-39)

6. Discharge coefficient for each air system.

   a. The discharge coefficient using weight flow from a flowmeter or a venturi and the discharge coefficient using weight flow from chamber measurements are computed.

If	KSW = 2	WP(M) = WPVRI(M)
	KSW = 1	WP(M) = WPCHR(M)
	KSW = 0	WP(M = WP(M)
	KSW = -1	WP(M) = WMCV(M)

$$MDOT(M) = \frac{WP(M)}{32.174}$$

(Eq. B-40)

$$WP / WI(M) = \frac{WP(M)}{WI(M)}$$

(Eq. B-41)

$$WPCHR / WI(M) = \frac{WPCHR(M)}{WI(M)}$$

(Eq. B-42)

$$WMCV / WI(M) = \frac{WMCV(M)}{WI(M)}$$

(Eq. B-43)

$$WPVRI / WI(M) = \frac{WPVRI(M)}{WI(M)}$$

(Eq. B-44)

If WI(M) = 0; WP/WI(M) = WPCHR(M)/WI(M) = WMCV(M)/WI(M) = WPVRI(M)/WI(M) = 0

7. Ideal thrust for each air system.
   a. The ideal thrust, FICHR(M), and ideal thrust coefficient CFICHR(M) are obtained from chamber weight flow.
   b. The ideal thrust, FI(M), and ideal thrust coefficient CFI(M) are obtained from flowmeter or venturi measured weight flow.
   c. Note that MACH, PO and QO are from Module A and M = air system.
   d. The constant required from the project engineer is AREF.

$$FICHR(M) = \sum_{I=1}^{NUMENG} FIENG(I)$$

(Eq. B-45)

If MACH < .1,

$$CFICHR(M) = \frac{FICHR(M)}{(PO) * (AREF)}$$

(Eq. B-46)

If MACH ≥ .1,

$$CFICHR(M) = \frac{FICHR(M)}{(QO) * (AREF)}$$

(Eq. B-47)

$$KI3 = (TTJAVG + 459.67) * \left[1 - \left(\frac{1}{PTJ / PO(M)} \right)^{KJ4} \right]$$

(Eq. B-48)

If KI3 < 0; KI3 = .0001

$$FI(M) = (KJ3) * (WP(M)) * \left(\sqrt{KI3} \right)$$

(Eq. B-49)

If MACH < .1,

$$CFI(M) = \frac{FI(M)}{(PO) * (AREF)}$$

(Eq. B-50)

If MACH ≥ .1,

$$CFI(M) = \frac{FI(M)}{(QO) * (AREF)}$$

(Eq. B-51)

F. <u>Secondary Flow Measurements</u>

If KSEC = 0, skip equations B-52 through B-58.

1. Secondary passage total pressure.

a. The total pressure measurements PTS(J) in the secondary air passage (up to 4) are used to compute the average secondary passage total pressure.

b. The constant required from the project engineer is KPTS(J).

$$PTSEC = \frac{\sum_{J=1}^{4} KPTS(J) * PTS(J)}{\sum_{J=1}^{4} KPTS(J)}$$

(Eq. B-52)

2. Secondary passage static pressure.

a. Static pressure measurements PS(J) in the secondary air passage (up to 4) are used to compute the average static pressure in the secondary air passage.

b. The constant required from the project engineer is KPS(J)

$$PSEC = \frac{\sum_{J=1}^{4} KPS(J) * PS(J)}{\sum_{J=1}^{4} KPS(J)}$$

(Eq. B-53)

3. Secondary duct total temperature

a. The total temperature TTSEC in the secondary duct is handled in the standard program for quantities.

4. Secondary mass flow

a. The constants required from the project engineer are RS, KPS, ZS, INTFMS. KPS and ZS are determined internally from INTFMS constant.

$$WPSEC = \frac{(FMS) * (PFMS) * (144.0)}{(RS) * (ZS) * (KPS) * (TFMS + 459.67)}, lbs / sec$$

(Eq. B-54)

$$MSDOT = \frac{WPSEC}{32.174}, slugs / sec$$

(Eq. B-55)

5. Pumping characteristics

$$PTS / PTJ = \frac{PTSEC}{(PTJ / PO(M)) * (PO)}$$

(Eq. B-56)

$$PTS / PTO = \frac{PTSEC}{PTO}$$

(Eq. B-57)

6. Corrected mass flow ratio

$$THETSE = \frac{MSDOT}{MDOT(M)} \sqrt{\frac{(TTSEC + 459.67) * RS}{(TTJAVG(M) + 459.67) * RJ}}$$

(Eq. B-58)

G. <u>Tertiary Flow Measurements</u>

If KBL = 0, skip equations B-59 through B-64.

1. Tertiary duct total pressure.

   a. The total pressure measurements PBL(J) in the tertiary duct (up to 4) are used to compute the average tertiary duct total pressure.

   b. The constant required from the project engineer is KPTBL(J).

$$PTBLAV = \frac{\sum_{J=1}^{4} KPTBL(J) * PTBL(J)}{\sum_{J=1}^{4} KPTBL(J)}$$

(Eq. B-59)

2. Tertiary duct static pressure.
   a. Static pressure measurements PBL(J) in the tertiary duct (up to 4) are used to compute the average static pressure in the tertiary duct.
   b. The constant required from the project engineer is KPBL(J).

$$PBLAVE = \frac{\sum_{J=1}^{4} KPBL(J) * PBL(J)}{\sum_{J=1}^{4} KPBL(J)}$$

(Eq. B-60)

3. Tertiary duct total temperature.
   a. Total temperature in the tertiary duct TTBL is handled in the standard program for quantities.

4. Tertiary mass flow.
   a. Venturi total pressure, PTV, and venturi static pressure, PV, are required.
   b. Tertiary weight flow is in units of lbs/sec.
   c. Tertiary mass flow is in units of slugs/sec.
   d. The constants required from the project engineer are RV, KV.

$$PV / PTV = \frac{PV}{PTV}$$

$$WPBL = 0.13594[(PTV - PV)/(PTV/14.696)]^{0.48117} * (PTV/14.696)/\sqrt{\frac{TTV + 459.67}{518.7}}$$

(Eq. B-61)

$$WIBL = 0.72167 * (PV/PTV)^{0.857143} * \sqrt{(PV/PTV)^{0.2857} - 1} * PTV/\sqrt{TTV + 459.67}$$

(Eq. B-62)

$$MBLDOT = WPBL/WIBL$$

(Eq. B-63)

5. Pumping characteristics.

$$PTB/PTJ = \frac{PTBLAV}{(PTJ/PO(M)) * (PO)}$$

(Eq. B-64)

$$PTB/PTO = \frac{PTBLAV}{PTO}$$

(Eq. B-65)

APPENDIX C

APPENDIX C

Skin Friction Drag

MODULE C SKIN FRICTION DRAG

SYMBOL	NOMENCLATURE
AREF	Model reference area used for coefficients, sq. in. If module B is used, this constant is already specified.
AWET(I)	Model wetted areas, sq. in.
	Where AWET(1) = total fuselage wetted area.
	AWET(2) = fuselage wetted area up to metric break
	AWET(3) = fuselage wetted area up to nozzle connect station.
	AWET(4) = wing wetted area.
	AWET(5) = vertical tail wetted area.
	AWET(6) = horizontal tail wetted area.
	AWET(7) = optional, for additional body.
CDF	Total skin friction drag coefficient.
CDFAFT	Afterbody plus nozzle skin friction drag coefficient.
CDFF	Total fuselageawkin friction drag coefficient.
CDFHT	Horizontal tails (canards) skin friction drag coefficient.
CDFNOZ	Nozzle skin friction drag coefficient.
CDFR(I)	Individual skin friction drag coefficients calculations.
CDFVT	Vertical tails(s) skin friction drag coefficient.
CDFW	Wing skin friction drag coefficient.
FL(I)	Model reference lengths, feet.
	Where FL(1) = fuselage length.
	FL(2) = fuselage length up to metric break.
	FL(3) = fuselage length up to nozzle connect station.
	FL(4) = wing mean aerodynamic chord.

SYMBOL	NOMENCLATURE
	FL(5) = vertical tail mean aerodynamic chord.
	FL(6) = horizontal tail mean aerodynamic chord.
	FL(7) = optional.
FORMF(I)	Form factors
	Where FORMF(1) = fuselage.
	FORMF(2) = wing.
	FORMF(3) = vertical tail.
	FORMF(4) = horizontal tail.
	FORMF(5) = optional.
KFAFT	Constant used to include proper terms in total skin friction drag term, CDF. Must equal 0.0 or 1.0. If the relevant term is to be incorporated to the total skin friction drag, set to 1.0; otherwise, set to 0.0.
KFF	See KFAFT.
KFNOZ	See KFAFT.

APPENDIX C

Module C

Skin Friction Drag

Skin friction drag is computed by the method of Frankl and Voishel[2] for compressible, turbulent flow on a flat plate.

A. Required Constants

All constants are initialized to a value of 0.0 except FORMF(I) which is initialized to a value of 1.0.

1. AWET(I)

2. FORMF(I)

Form factors may be obtained from LWP - 1120.

Fuselage: $FORMF(I) = 1.0 + 1.5(d/1)^{1.5} + 7(d/1)^3$ (Eq. C-1)

Empennage: $FORMF(I) = 1.0 + 1.44(t/c) + 2(t/c)^2$ (Eq. C-2)

3. The model reference lengths (FL(I)), are given in the nomenclature section.

4. The model reference area (AREF) is used for coefficients, sq. in. If jet exhaust measurements are used, this constant is already specified.

---

[2] Frankl, F.; and Voishel, V.: Friction in the Turbulent Boundary Layer of a Compressible Gas at High Speeds. TM NACA No. 1032, 1942.

5. The constants (KFF, KFAFT, KFNOZ) used to include proper terms in total skin friction drag term, CDF, must equal 0 or 1.

B. <u>Test for Skin Friction Calculation</u>

If AWET(1) = 0, skip the calculations for the skin friction drag in this module.

C. <u>Fuselage Skin Friction Drag</u>

1. The constants required from the project engineer are AWET(1), AWET(2), AWET(3), FL(1), FL(2), FL(3), AREF, and FORMF(1).

   J = 3

   If AWET(2) = 0 and AWET(3) = 0, J = 1

   If AWET(2) ≠ 0 and AWET(3) = 0, J = 2

   Calculate CDFR(I) for I = 1, J

$$\mathrm{CDFR(I)} = \frac{.472 * \mathrm{AWET(I)} * \mathrm{FORMF(1)}}{\left(1 + .2\,\mathrm{MACH}^2\right)^{.467} * \left\{\log_{10}\left[(\mathrm{RN}/\mathrm{FT}) * \mathrm{FL(I)}\right]\right\}^{2.58} * \mathrm{AREF}}$$

(Eq. C-3)

If MACH < .1, CDFR(I) = 0.0

CDFF = CDFR(1) (Eq. C-4)

If AWET(2) ≠ 0,

CDFAFT = CDFR(1) - CDFR(2) (Eq. C-5)

If AWET(3) ≠ 0,

CDFNOZ = CDFR(1) - CDFR(3) (Eq. C-6)

D. Empennage Skin Friction Drag

1. The constants required from the project engineer are AWET(4), AWET(5), AWET(6), FL(4), FL(5), FL(6), AREF, FORMF(2), FORMF(3), FORMF(4), KFF, KFAFT, and KFNOZ.

Calculate CDFR(I) for I = 4, 7

J = I - 2

$$CDFR(I) = \frac{.472 * AWET(I) * FORMF(J)}{\left(1 + .2MACH^2\right)^{.467} * \left\{\log_{10}\left[(RN / FT) * FL(I)\right]\right\}^{2.58} * AREF}$$

(Eq. C-7)

IF MACH < .1, CDFR(I) = 0

CDFW = CDFR(4)

CDFVT = CDFR(5)

CDFHT = CDFR(6)

E. Total Skin Friction Drag

1. Skin friction drag of the entire model is computed.

CDF = (KFF * CDFF) + (KFAFT * CDFAFT) + (KFNOZ * CDFNOZ) + CDFW + CDFVT + CDFHT + CDFR(7)

(Eq. C-8)

APPENDIX D

APPENDIX D

Balance Loads and Model Attitudes Calculations

Figures

MODULE D BALANCE LOADS AND MODEL ATTITUDES

SYMBOL	NOMENCLATURE

The arrays F0 through F20 are forces and moments whose units are lbs and in. lbs.

AF(I,J)	Axial force, lbs., where I = balance number and J = correction number.
AF0(I)	Initial axial load, lbs., where I = balance number.
AFT(I)	Total axial load, lbs., where I = balance number.
AFTARE(I)	Axial weight tares, lbs., where I = balance number.
ALPHA	Model angle of attack, degrees.
AMOM(I)	Axial force momentum correction, lbs., where I = balance number.
ARB(II,K)	Areas or moment arms * areas used with PBASE(II) for computing base force and base moment tares. Care should be used to insure proper tare force signs. Area and arm units must be consistent with units of base pressures and balance components. Second balance, sq. in., where K = component number and II = orifice number.
ARP(II,K)	Areas or moment arms * areas used with PBASE(II) for computing base force and base moment tares. Care should be used to insure proper tare force signs. Area and arm units must be consistent with units of base pressures and balance components. Third balance, sq.

SYMBOL	NOMENCLATURE
	in., where K = component number and II = orifice number.
ARPB(II,K)	Areas or moment arms * areas used with PBASE(II) for computing base force and base moment tares. Care should be used to insure proper tare force signs. Area and arm units must be consistent with units of base pressures and balance components. First balance sq. in., where K = component number and II = orifice number.
A_0	Initial balance loads, axial force, lbs. (Weight Tares)
A_3	Balance component quantity corrected for high interactions coupled with high model restraints, axial force, lbs. (Weight Tares)
A_4	Balance component quantities corrected for balance orientation to gravity axis, axial force, lbs. (Weight Tares)
BETA	Angle of sideslip, degrees.
BSPAN(I)	Roll and yaw moments reference length. Normally wing span, inches, where I = balance number.
CA(I)	Axial force coefficient in the body axis, where I = balance number.
CABASE(I)	Base axial force coefficient, where I = balance number.
CAREF(I)	Axial force coefficient in the reference axis, where I = balance number.
CC(I)	Crosswind coefficient in the wind axis, where I = balance number.

SYMBOL	NOMENCLATURE
CD(I)	Drag coefficient in the wind axis, where I = balance number.
CDBASE(I)	Base drag coefficient, where I = balance number.
CDS(I)	Drag coefficient in the stability axis, where I = balance number.
CHORD(I)	Pitching moment reference length. Normally wing mean aerodynamic chord, inches, where I = balance number.
CL(I)	Lift coefficient in the wind axis, where I = balance number.
CLS(I)	Lift coefficient in the stability axis, where I = balance number.
CLSQR(I)	Lift coefficient squared, where I = balance number.
CMX(I)	Rolling moment coefficient in the body axis, where I = balance number.
CMXREF(I)	Rolling moment coefficient in the reference axis, where I = balance number.
CMXS(I)	Rolling moment coefficient in the stability axis, where I = balance number.
CMXW(I)	Rolling moment coefficient in the wind axis, where I = balance number.
CMY(I)	Pitching moment coefficient in the body axis, where I = balance number.
CMYREF(I)	Pitching moment coefficient in the reference axis, where I = balance number.
CMYS(I)	Pitching moment coefficient in the stability axis, where I = balance number.

SYMBOL	NOMENCLATURE
CMYW(I)	Pitching moment coefficient in the wind axis, where I = balance number.
CMZ(I)	Yawing moment coefficient in the body axis, where I = balance number.
CMZREF(I)	Rolling moment coefficient in the reference axis, where I = balance number.
CMZS(I)	Yawing moment coefficient in the stability axis, where I = balance number.
CMZW(I)	Yawing moment coefficient in the wind axis, where I = balance number.
CN(I)	Normal force coefficient in the body axis, where I = balance number.
CNBASE(I)	Base normal force coefficient, where I = balance number.
CNREF(I)	Normal force coefficient in the reference axis, where I = balance number.
CPBASE(II)	Base pressure coefficient, where II = orifice number.
CPMBASE(I)	Base pitching moment coefficient, where I = balance number.
CRMBASE(I)	Base rolling moment coefficient, where I = balance number.
CY(I)	Side force coefficient in the body axis, where I = balance number.
CYBASE(I)	Base side force coefficient, where I = balance number.
CYMBASE(I)	Base yawing moment coefficient, where I = balance number.

SYMBOL	NOMENCLATURE
CYREF(I)	Side force coefficient in the reference axis, where I = balance number.
CYS(I)	Side force coefficient in the wind axis, where I = balance number.
C1	Linear balance interactions.
C2	Nonlinear balance interactions.
ΔA	W(AF), axial force weight tares, lbs.
$\Delta \ell_1$	WY(RM), rolling moment weight tares, in. lb.
$\Delta \ell_2$	WZ(RM), rolling moment weight tares, in. lb.
Δm_1	WX(PM), pitching moment weight tares, in. lb.
Δm_2	WZ(PM), pitching moment weight tares, in. lb.
ΔN	W(NF), normal force weight tares, lbs.
Δn_1	WX(YM), yawing moment weight tares, in. lb.
Δn_2	WY(YM), yawing moment weight tares, in. lb.
DPBASE(II)	Differential base pressures, where II = orifice number.
$\Delta W(I)$	Half weight of balance, lbs., where I = balance number. Used in weight tares program. If $\Delta W(I)$ is zero and DELW is non- zero from the balance interaction deck, then $\Delta W(I)$ is set equal to DELW.
ΔY	W(SF), side force weight tares, lbs.
FA	Axial force, lbs.
FA(I)	Final body axis axial force, lbs., where I = balance number.
FA(I,L)	Balance axial force rotated (L = 1) and translated (L = 2) to body axis, lbs., where I = balance number.
FABASE(I)	Base axial force, lbs., where I = balance number.

SYMBOL	NOMENCLATURE
FAMAX	Maximum absolute value of axial force, lbs.
FAMOM(I)	Axial force due to momentum of flow, lbs., where I = balance number.
FAREF'(I)	Axial force rotated to reference axis, lbs., where I = balance number.
FAREF(I)	Axial force translated to reference axis, lbs., where I = balance number.
FC(I)	Crosswind force in the wind axis, lbs., where I = balance number.
FD(I)	Drag force in the wind axis, lbs., where I = balance number.
FDS(I)	Drag force in the stability axis, lbs., where I = balance number.
FL(I)	Lift force in the wind axis, lbs., where I = balance number.
FLS(I)	Lift force in the stability axis, lbs., where I = balance number.
FN	Normal force, lbs.
FN(I)	Final body axis normal force, lbs., where I = balance number.
FN(L,I)	Balance normal force rotated (L = 1) and translated (L = 2) to body axis, lbs., where I = balance number.
FNBASE(I)	Base normal force, lbs., where I = balance number.
FNMAX	Maximum absolute value of normal force, lbs.
FNREF'(I)	Normal force rotated to reference axis, lbs., where I = balance number

SYMBOL	NOMENCLATURE
FNREF(I)	Normal force translated to reference axis, lbs., where I = balance number.
FP	All product combinations of vector FT.
FT	Corrected total loads.
FTARE	Tare loads.
FUT	Uncorrected total loads.
FY	Side force, lbs.
FY(I)	Final body axis side force, lbs., where I = balance number.
FY(I,L)	Balance side force rotated (L = 1) and translated (L = 2) to body axis, lbs., where I = balance number.
FYBASE(I)	Base side force, lbs., where I = balance number.
FYMAX	Maximum absolute value of side force, lbs.
FYREF'(I)	Side force rotated to reference axis, lbs., where I = balance number.
FYREF(I)	Side force translated to reference axis, lbs., where I = balance number.
FYS(I)	Side force in the stability axis, lbs., where I = balance number.
F0	Initial loads.
F1	Uncorrected balance quantities.
F2	Balance component quantities corrected for interactions.
F3	Balance component quantities corrected for high interactions coupled with high model restraints.
F4	Balance quantities corrected for balance orientation to gravity axis, attitude loads, and weight tares.
F5	Balance quantities corrected for method of attachment.

SYMBOL	NOMENCLATURE
F6	Balance components rotated to the model (body) axis.
F7	Balance components rotated and translated to the model (body) axis.
F8	Differential base pressure forces.
F9	Base force and moment tares.
F10	Final body axis components.
F11	Stability axis components.
F12	Wind axis components.
F13	Rotation from body axis to reference axis.
F14	Alternate reference axis coefficients.
F15	Reference axis coefficients.
F16	Base force and moment tare coefficients.
F17	Base pressure coefficients.
F18	Model (body) axis coefficients.
F19	Stability axis coefficients.
F20	Wind axis coefficients.
HIRXX(I)	Corrections for the effect of having a model with high restraints coupled with high interactions, where XX is the balance component (AF, SF, NF, RM, PM, YM) and I = balance number.
IGRND(I)	Grounding of balance, where I = balance number.
KMOM	Axial momentum correction term. = 0, no correction. = 1, applies nonblowing correction only and automatically computes FAMOM(I) = 2, applies nonblowing and blowing corrections

SYMBOL	NOMENCLATURE
KPP	A units conversion factor, initialized at 1. If PBASE is in PSF and PO is in PSI, KPP = 144.0 If PBASE is in PSI and PO is in PSF, KPP = 0.00694 If PBASE is differential (PBASE-PO), KPP = 0.0 If PBASE is absolute, KPP = 1.0 (Standard).
KSIGN(I)	Constant for correcting balance quantities for grounding by wrong end, where I = balance number. KSIGN = 1 for normal balance attachment. KSIGN = -1 for grounding balance by wrong end.
$K_{A,1}$	COS(THETA0) * COS(PHI0)
$K_{A,2}$	SIN(THETA0)
$K_{A,3}$	COS(THETA0) * SIN(PHI0)
L/D(I)	Lift over drag ratio in the wind axis, where I = balance number.
LS/DS(I)	Lift over drag ratio in stability axis, where I = balance number.
ℓ_0	Initial balance loads, roll moment, in. lb.
ℓ_3	Balance component quantity corrected for high interactions coupled with high model restraints, roll moment, in. lb.
ℓ_4	Balance component quantities corrected for balance orientation to gravity axis, roll moment, in. lb.
METHOD	Method to be used in the weight tares program.
MX(I)	Final body axis rolling moment, in. lb., where I = balance number.

SYMBOL	NOMENCLATURE
MX(I,L)	Balance rolling moment rotated (L = 1) and translated (L = 2) to body axis, in. lb., where I = balance number.
MXREF'(I)	Rolling moment rotated to reference axis, in. lb., where I = balance number.
MXREF(I)	Rolling moment translated to reference axis, in. lb., where I = balance number.
MXS(I)	Rolling moment in the stability axis, in. lb., where I = balance number.
MXW(I)	Rolling moment in the wind axis, in. lb., where I = balance number.
MY(I)	Final body axis pitching moment, in. lb., where I = balance number.
MY(I,L)	Balance pitching moment rotated (L = 1) and translated (L = 2) to body axis, in. lb., where I = balance number.
MYREF'(I)	Pitching moment rotated to reference axis, in. lb., where I = balance number.
MYREF(I)	Pitching moment translated to reference axis, in. lb., where I = balance number.
MYS(I)	Pitching moment in the stability axis, in. lb., where I = balance number.
MYW(I)	Pitching moment in the wind axis, in. lb., where I = balance number.
MZ(I)	Final body axis yawing moment, in. lb., where I = balance number.

SYMBOL	NOMENCLATURE
MZ(I,L)	Balance yawing moment rotated (L = 1) and translated (L = 2) to body axis, in. lb., where I = balance number.
MZREF'(I)	Yawing moment rotated to reference axis, in. lb., where I = balance number.
MZREF(I)	Yawing moment translated to reference axis, in. lb., where I = balance number.
MZS(I)	Yawing moment in the stability axis, in. lb., where I = balance number.
MZW(I)	Yawing moment in the wind axis, in. lb., where I = balance number.
m_0	Initial balance loads, pitch moment, in. lb.
m_3	Balance component quantity corrected for high interactions coupled with high model restraints, pitch moment, in. lb.
m_4	Balance component quantities corrected for balance orientation to gravity axis, pitch moment, in. lb.
NF(I,J)	Normal force, lbs., where I = balance number and J = correction number.
NF0(I)	Initial normal load, lbs., where I = balance number.
NFT(I)	Total normal load, lbs., where I = balance number.
NFTARE(I)	Normal weight tares, lbs., where I = balance number.
NUBAL	Number of balances in the model, (max 5).
n_0	Initial balance loads, yaw moment, in. lb.
n_3	Balance component quantity corrected for high interactions coupled with high model restraints, yaw moment, in. lb.

SYMBOL	NOMENCLATURE
n_4	Balance component quantities corrected for balance orientation to gravity axis, yaw moment, in. lb.
N_0	Initial balance loads, normal force, lbs.
N_3	Balance component quantity corrected for high interactions coupled with high model restraints, normal force, lbs.
N_4	Balance component quantities corrected for balance orientation to gravity axis, normal force, lbs.
PBASE(II)	Base pressure, lbs/sq. in., where II = orifice number.
PHI	Model Euler roll angle, degrees.
PHIB	Euler roll rotation angle between primary balance and model, degrees.
PHIB2	Euler roll rotation angle between secondary balance and model, degrees.
PHIB3	Euler roll rotation angle between tertiary balance and model, degrees.
PHID	Roll deflection of primary balance, degrees.
PHID2	Roll deflection of secondary balance, degrees.
PHID3	Roll deflection of tertiary balance, degrees.
PHIDX(I)	Deflection roll angle constants, where X is balance component (A, S, N, R, P, Y) and I = balance number.
PHIK	Euler roll angle to account for knuckle and/or primary balance angles in relation to tunnel support, degrees.
PHIK2	Euler roll angle to account for orientation of undeflected secondary balance in relation to primary balance, degrees.

SYMBOL	NOMENCLATURE
PHIK3	Euler roll angle to account for knuckle and/or tertiary balance angles in relation to tunnel support, degrees.
PHIR	Euler roll rotation angle between model (body) axis and reference axis, positive in same direction as PHIB, degrees.
PHIS	Strut roll angle, degrees.
PHI0,I	Wind off zero attitude of each balance, degrees, where I = balance number.
PM	Pitching moment, in. lb.
PM(I,J)	Pitching moment, in. lb., where I = balance number and J = correction number.
PMBASE(I)	Base pitching moment, in. lb., where I = balance number.
PMMAX	Maximum absolute value of pitch moment, in. lb.
PM0(I)	Initial pitching moment, in. lb., where I = balance number.
PMT(I)	Total pitching moment, in. lb., where I = balance number.
PMTAREI	Pitching weight tares, in. lb., where I = balance number.
PSI	Model yaw angle, degrees.
PSIB	Euler yaw rotation angle between primary balance and model, degrees.
PSIB2	Euler yaw rotation angle between secondary balance and model, degrees.
PSIB3	Euler yaw rotation angle between tertiary balance and model, degrees.
PSID	Yaw deflection of primary balance, degrees.
PSID2	Yaw deflection of secondary balance, degrees.

SYMBOL	NOMENCLATURE
PSID3	Yaw deflection of tertiary balance, degrees.
PSIDX(I)	Deflection yaw angle constants, where X is the balance component (A,S,N,R,P,Y) and I = balance number.
PSIK	Euler yaw angle to account for knuckle and/or primary balance angles in relation to tunnel support, degrees.
PSIK2	Euler yaw angle to account for orientation of undeflected secondary balance in relation to primary balance, degrees.
PSIK3	Euler yaw angle to account for knuckle and/or tertiary balance angles in relation to tunnel support, degrees.
PSIR	Eule yaw rotation angle between model (body) axis and reference axis, positive in same direction as PSIB, degrees.
PSIS	Strut yaw angle, degrees
PSIU	Tunnel sideflow angle, degrees.
R(I,J)	I'th row and J'th column in rotation matrix.
RGB	Gravity to balance rotation matrix.
RM	Rolling moment, in. lb.
RM(I,J)	Rolling moment, in. lb., where I = balance number and J = correction number.
RMBASE(I)	Base rolling moment, lbs., where I = balance number.
RMMAX	Maximum absolute value of roll moment, in. lb.
RM0(I)	Initial rolling moment, in. lb., where I = balance number.
RMT(I)	Total rolling moment, in. lb., where I = balance number.
RMTARE(I)	Rolling weight tares, in. lb., where I = balance number.

SYMBOL	NOMENCLATURE
SAREA(I)	Reference area for balance coefficients. Normally wing area, sq. in., where I = balance number.
SF(I,J)	Side force, lbs., where I = balance number and J = correction number.
SF0(I)	Initial side load, lbs., where I = balance number.
SFT(I)	Total side load, lbs., where I = balance number.
SFTARE(I)	Side weight tares, lbs., where I = balance number.
TAREA	Axial momentum tare correction term.
TAREN	Normal momentum tare correction term.
TAREP	Pitching momentum tare correction term.
TARER	Rolling momentum tare correction term.
TARES	Side momentum tare correction term.
TAREY	Yawing momentum tare correction term.
THEDX(I)	Deflection pitch angle constants, where X is the balance component (A,S,N,R,P,Y) and I = balance number.
THETA	Model euler pitch angle, degrees.
THETAB	Euler pitch rotation angle between primary balance and model, degrees.
THETAB2	Euler pitch rotation angle between secondary balance and model, degrees.
THETAB3	Euler pitch rotation angle between tertiary balance and model, degrees.
THETAD	Pitch deflection of primary balance, degrees.
THETAD2	Pitch deflection of secondary balance, degrees.
THETAD3	Pitch deflection of tertiary balance, degrees.

SYMBOL	NOMENCLATURE
THETAK	Euler pitch angle to account for knuckle and/or primary balance angles in relation to tunnel support, degrees.
THETAK2	Euler pitch angle to account for orientation of undeflected secondary balance in relation to primary balance, degrees.
THETAK3	Euler pitch angle to account for knuckle and/or tertiary balance angles in relation to tunnel support, degrees.
THETAR	Euler pitch rotation angle between model (body) axis and reference axis, positive in same direction as THETAB, degrees.
THETAS	Strut pitch angle, degrees.
THETAU	Tunnel upflow angle, degrees.
THETA0,(I)	Wind off zero attitude of each balance, degrees, where I = balance number.
W	Weight tares.
x	Distance of center of gravity to balance center, inches.
XBAR(I)	Moment transfer distance measured in the body force axis system from the balance moment center to the desired moment center, positive in the direction of positive model thrust, side and normal force respectively, inches, where I = balance number.
XICH(I)	Intercept for momentum term, where I = balance number.
XK	Constants used in calculating momentum correction terms.
XKCH(I)	Slope for momentum term, where I = balance number.

SYMBOL	NOMENCLATURE
XREF	Moment transfer distance. Measured relative to and in the same direction as XBAR, inches.
y	Distance of center of gravity to balance center, inches.
YBAR(I)	See XBAR.
YM	Yawing moment, in. lb.
YM(I,J)	Yawing moment, in. lb., where I = balance number and J = correction number.
YMBASE(I)	Base yawing moment, lbs., where I = balance number.
YMMAX	Maximum absolute value of yaw moment, in. lb.
YM0(I)	Initial yawing moment, in. lb., where I = balance number.
YMT(I)	Total yawing moment, in. lb., where I = balance number.
YMTARE(I)	Yawing weight tares, in. lb., where I = balance number.
YREF	Moment transfer distance. Measured relative to and in the same convention as YBAR, inches.
Y_0	Initial balance loads, side force, lbs.
Y_3	Balance component quantity corrected for high interactions coupled with high model restraints, side force, lbs.
Y_4	Balance component quantities corrected for balance orientation to gravity axis, side force, lbs.
z	Distance of center of gravity to balance center, inches.
ZBAR(I)	See XBAR.
ZREF	Moment transfer distance. Measured relative to and in the same convention as ZBAR, inches.

APPENDIX D

Module D

Balance Loads and Model Attitude

A. Required Constants

Required constants are defined in the nomenclatures.

1. Primary balance deflection constants - Δangle/Δload

PSIDA1	=	ΔPSID/ΔAF(1,3)	
THEDA1	=	ΔTHETAD/ΔAF(1,3)	See related
PHIDA1	=	ΔPHID/ΔAF(1,3)	items 2. and 3.
PSIDN1	=	ΔPSID/ΔNF(1,3)	
THEDN1	=	ΔTHETAD/ΔNF(1,3)	
etc.			

2. Primary balance deflection angle names - PSID, THETAD, PHID. These names are optional as shown in item 3. However, they are suggested and extreme care should be used if changed since this is based on these names. No values are required for these angles since they are computed internally from the constants supplied under item 1 as follows:

$$\begin{aligned} PSID = {} & (PSIDA1)AF(1,3) + (PSIDN1)NF(1,3) \\ & + (PSIDS1)SF(1,3) + (PSIDR1)RM(1,3) \\ & + (PSIDP1)PM(1,3) + (PSIDY1)YM(1,3) \end{aligned} \qquad \text{(Eq. D-1)}$$

$$THETAD = (THEDA1)AF(1,3) + \ldots\ldots \qquad \text{(Eq. D-2)}$$

$$PHID = (PHIDA1)AF(1,3) + \ldots\ldots \qquad \text{(Eq. D-3)}$$

3. Input of items 1 and 2 - Deflection angle names and constants are input from C-card images (which may be modified) stored on magnetic storage disks. A maximum of six deflections is permitted.

   Therefore, the six values assigned in the yaw plane (PSI) for example are PSIDA1, PSIDS1, PSIDN1, PSIDR1, PSIDP1, and PSIDY1 as defined in item 1.

4. Input of rotations from gravity to primary balance - Order of rotations from gravity to primary balance axis system (see Figure D- 1(a) to D-1(e)) are input from the R-card image names stored on magnetic storage disks.

5. Secondary balance deflection constants - Δangle/Δload

PSIDA2	=	ΔPSID2/ΔAF(2,3)	
THEDA2	=	ΔTHETAD2/ΔAF(2,3)	See related
PHIDA2	=	ΔPHID2/ΔAF(2,3)	Items 6. and 7.
PSIDN2	=	ΔPSID2/ΔNF(2,3)	
THEDN2	=	ΔTHETAD2/ΔNF(2,3)	

   etc.

6. Secondary balance deflection angle names - PSID2, PSID3, THETAD2, PHID2. These names are optional as shown in item 7. However, they are suggested and extreme care should be used if changed since this description is based on these names. No values are required for these angles since they are computed internally from the constants supplied under item 5 as follows:

$$PSID2 = (PSIDA2)AF(2,3) + (PSIDN2)NF(2,3) + (PSIDS2)SF(2,3) + (PSIDR2)RM(2,3) + (PSIDP2)PM(2,3) + (PSIDY2)YM(2,3) \quad \text{(Eq. D-4)}$$

$$THETAD2 = (THEDA2)AF(2,3) + \ldots\ldots \quad \text{(Eq. D-5)}$$

$$PHID2 = (PHIDA2)AF(2,3) + \ldots\ldots \quad \text{(Eq. D-6)}$$

7. Input of items 5. and 6. - Deflection names and constants are input from C-card image names stored on magnetic disks. Six is the maximum number of deflections permitted.

8. Tertiary balance deflection angles are handled in a manner similar to primary and secondary balance constants.

9. Input of rotations (THETAK2, PSIK2, THETAD2, etc.) from primary balance to secondary balance - Order of rotations from the primary balance to the secondary balance are input from R-card images stored on magnetic disks. See Figure D-1(f).

10. Wind-off-zero attitude of each balance - Input PHI0, THETA0, from card images stored on magnetic disks for each balance. This option is normally used as a result of problems associated with option 2. It is also used when data zeros are not used in the force data reduction scheme. If data zeros are not taken and values are not input from the disk, PHI0 = THETA0 = 0 is assumed. See Figure D-1(g).

11. Weight tares and attitude loads - Tares are determined automatically from a 700 series weight-shift run made immediately before each model configuration tunnel run. Do not input W, X, Y, Z, W(AF), W(SF), ..., etc.

12. HIRAFI, HIRNFI, HIRSFI, HIRPMI, HIRYMI, HIRRMI where I = balance number - These constants correct for the effect of having a model with high restraints (HIR) coupled with a balance with high interactions (AF, NF, etc.). Thus, the name HIRAFI, HIRNFI, etc. These constants are obtained for each balance component by the following equation.

$$\text{HIR}\ \underline{\text{xx}}(\text{I}) = \frac{\text{Tunnel balance xx calibration}}{\underline{\text{xx}}\ \text{span check}} - 1$$

(Eq. D-7)

where $\underline{\text{xx}}$ = balance component

Note that when this correction is applied, the balance spans should be used in the standard program for quantities (EU) and not in-tunnel calibration. These constants are input from the C-card images stored on the magnetic disks for each balance.

13. KSIGN(I) - Constant for correcting balance quantities for grounding by the wrong end, where I = balance number. As shown in Figure D-2, grounding the balance by the wrong end ("A" cases) rather than the taper end results in a change of each balance component sign. Therefore

KSIGN(I) = 1 for normal balance attachment

KSIGN(I) = -1 for grounding balance by wrong end.

14. THETAU - Tunnel upflow angle, see Figure D-3.

15. PSIU - Tunnel sideflow angle, see Figure D-3.

16. Input of items 14. and 15. - THETAU and PSIU are the required rotations for the wind-to-gravity transformation and are input from the T-card images (tables as function of MACH) stored on magnetic disks.

17. Euler yaw, pitch and roll rotation angles (PSIB, THETAB, PHIB) between balance and model, are shown in Figure D-4(a).

18. Input of - PSIB(I), THETAB(I), and PHIB(I) - Required rotations for the balance-to-model transformation are input from C-card images stored on magnetic disks.

19. XBAR(I), YBAR(I), ZBAR(I) - Moment transfer distances are measured in the body force axis system from the balance moment center to the desired moment center, positive in the direction of positive model thrust, side and normal force, respectively (see Figure D-4(b)). Input from C-card images stored on magnetic disks, where I = balance number.

20. ARPB(II,K) - Areas or momentum arms * areas used with PBASE(II) for computing base force and base moment tares, where

II = orifice number. Use care to insure proper tare force signs. Area and arm units must be consistent with units of base pressures and balance components. ARB(II,K) is the same but for the second balance. ARP(II,K) is the same but for the third balance.

21. Input of item 20. - Areas and arm x areas are input from C-card images stored on magnetic disks. A maximum of 20 may be used.

22. KPP - Units conversion factor, initialized at 1.

    If PBASE is in PSF and PO is in PSI, KPP = 144

    If PBASE is in PSI and PO is in PSF, KPP = .0069444

    If PBASE is differential (PBASE-PO), KPP = 0

    If PBASE is absolute, KPP = 1 (standard)

    Input from C-card images stored on magnetic disks if not equal to 1.0.

23. Input of items - PSIR, THETAR, and PHIR are the required rotations for the model (body) to reference axis transformation and are input from C-card images stored on magnetic disks.

24. XREF, YREF, ZREF - Moment transfer distances are measured relative to and in the same convention as XBAR, YBAR and ZBAR. Input from C-card images stored on magnetic disks.

B. <u>Test for Balance Loads and Model Attitudes</u>

If NUBAL = 0, skip module D.

C. Balance Component Naming System

1. In general, the balance component naming system follows the format of WX(Y,Z), where

WX = component name is as follows:

AF = Axial force

NF = Normal force

SF = Side force

PM = Pitching moment

YM = Yawing moment

RM = Rolling moment

Y = balance number associated with component

1 = 1st balance

2 = 2nd balance

etc.

Z = number of corrections applied to component (uncorrected quantity = 1).

D. Uncorrected Balance Quantities

1. Signs on component quantities are uncorrected and thus are a strict function of model-balance orientation and the manner in which the model-balance attachment is made. Figure D-2 provides sketches showing the eight most frequent cases of model-balance orientation and the corresponding component signs. Each case is shown for grounding the balance taper end and for grounding the balance opposite end ("A" cases).

2. For normal NASA type balances, the component quantities are obtained directly from the standard program for quantities. The balance components for this type of balance are always named as follows:

$$\begin{bmatrix} \text{Axial force} & -\text{AF}(I,1) \\ \text{Normal force} & -\text{NF}(I,1) \\ \text{Side force} & -\text{SF}(I,1) \\ \text{Pitch moment} & -\text{PM}(I,1) \\ \text{Yaw moment} & -\text{YM}(I,1) \\ \text{Roll moment} & -\text{RM}(I,1) \end{bmatrix} = [\text{F1}]$$

(Eq. D-8)

where I = balance number

3. For TASK type balances, the component quantities are also obtained directly from the standard program for quantities (EU), but additional equations must be supplied since axial force and rolling moment are generally the only two components obtained directly with TASK type balances. The following equations and names are suggested for the engineering units program. The following equations assume the axes origin is at the center of the balance.

$$\text{NF}(I,1) = \text{N1}(I,1) + \text{N2}(I,1) \qquad \text{(Eq. D-9)}$$

$$\text{PM}(I,1) = \text{N1}(I,1) - \text{N2}(I,1) \qquad \text{(Eq. D-10)}$$

$$\text{SF}(I,1) = \text{S1}(I,1) + \text{S2}(I,1) \qquad \text{(Eq. D-11)}$$

$$\text{YM}(I,1) = \text{S1}(I,1) - \text{S2}(I,1) \qquad \text{(Eq. D-12)}$$

The names shown for the final quantities are mandatory.

E. Gravity to Balance Transformation Angles

The tunnel support pitch, roll and yaw angles are used in gravity to balance transformations.

Tunnel Support Pitch Angle

1. The tunnel support pitch angle is THETAS. See Figure D-1(a).

2. THETAS is computed in the engineering units program. It may be obtained from the strut encoder or from a "dangle" meter in the model.

Tunnel Support Roll Angle

1. The tunnel support roll angle is PHIS. See Figure D-1(a).

2. PHIS is obtained from the engineering units program. It is obtained from the strut encoder.

Tunnel Support Yaw Angle

1. The tunnel support yaw angle is PSIS. See Figure D-1(a)

2. PSIS is obtained from the engineering units program.

F. Balance Quantities Corrected for Interactions, Weight Tares and Momentum Tares

1. Balance component quantities corrected for interactions are named as follows:

$$\begin{bmatrix} \text{Axial force} & - & AF(I,2) \\ \text{Normal force} & - & NF(I,2) \\ \text{Side force} & - & SF(I,2) \\ \text{Pitch moment} & - & PM(I,2) \\ \text{Yaw moment} & - & YM(I,2) \\ \text{Roll moment} & - & RM(I,2) \end{bmatrix} = [F2]$$

(Eq. D-13)

2. Balance component quantities corrected for high interactions coupled with high model restraints are named as follows:

$$\begin{bmatrix} \text{Axial force} & - & AF(I,3) \\ \text{Normal force} & - & NF(I,3) \\ \text{Side force} & - & SF(I,3) \\ \text{Pitch moment} & - & PM(I,3) \\ \text{Yaw moment} & - & YM(I,3) \\ \text{Roll moment} & - & RM(I,3) \end{bmatrix} = [F3]$$

(Eq. D-14)

3. Balance component quantities corrected for the attitude loads and weight tares are named as follows:

$$\begin{bmatrix} \text{Axial force} & - & AF(I,4) \\ \text{Normal force} & - & NF(I,4) \\ \text{Side force} & - & SF(I,4) \\ \text{Pitch moment} & - & PM(I,4) \\ \text{Yaw moment} & - & YM(I,4) \\ \text{Roll moment} & - & RM(I,4) \end{bmatrix} = [F4]$$

(Eq. D-15)

4. Initial balance loads or weight tares are named as follows: where I = balance number.

$$\begin{bmatrix} AF0(I), NF0(I), SF0(I) \\ PM0(I), YM0(I), RM0(I) \end{bmatrix} = [F0]$$

(Eq. D-16)

5. Total balance loads (AF(I,1) + AF0(I), NF(I,1) + NF0(I), etc. are named as follows:

$$\begin{bmatrix} AFT(I), NFT(I), SFT(I) \\ PMT(I), YMT(I), RMT(I) \end{bmatrix} = [FT]$$

(Eq. D-17)

6. First order interactions are represented by a matrix C1; second order interactions are represented by a matrix C2.

7. Attitude weight tares are named as follows:

$$[F_{TARE}] = \begin{bmatrix} AFTARE(I), NFTARE(I), SFTARE(I) \\ PMTARE(I), YMTARE(I), RMTARE(I) \end{bmatrix}$$

(Eq. D-18)

8. Constants required from the project engineer are:

   a. For gravity-to-primary-balance rotations, see Figure D-1(e). For gravity-to-tunnel-strut rotation, see Figure D-1(a).

      THETAS, PHIS, and PSIS are supplied from Section E.

      For tunnel strut-to-undeflected-primary balance rotations, see Figure D-1(b) and D-1(c).

      PSIK, THETAK, PHIK

For undeflected balance-to-deflected-balance rotations, see Figure D-1(d).

PSIDA1, THEDA1, PHIDA1

PSIDS1, THEDS1, PHIDS1

PSIDN1, THEDN1, PHIDN1

PSIDR1, THEDR1, PHIDR1

PSIDP1, THEDP1, PHIDP1

PSIDY1, THEDY1, PHIDY1

b. Primary-to-secondary-balance rotations

For primary balance-to-undeflected-secondary balance rotations, see Figure D-1(f).

PSIK2, THETAK2, PHIK2

Undeflected secondary balance-to-deflected-secondary balance rotations (with respect to primary balance).

PSIDA2, THEDA2, PHIDA2

PSIDS2, THEDS2, PHIDS2

PSIDN2, THEDN2, PHIDN2

PSIDR2, THEDR2, PHIDR2

PSIDP2, THEDP2, PHIDP2

PSIDY2, THEDY2, PHIDY2

The third to fifth balance is similar to the above but with the number 3 to 5 replacing the number 2 in the second balance.

For wind-off-zero attitude of each balance (See Figure D-1(a))

PHI0, I; THETA0, I,

c. High restraint and interaction constants

HIRAFI, HIRNFI, HIRSFI

HIRPMI, HIRYMI, HIRRMI

9. The following description on correcting balance quantities for interactions and weight tares does not provide the exact equations for computing corrected balance quantities. The PAB balance check point program or the contractor's user manual must be consulted for these. However, this does provide the general outline for computing corrected balance quantities.

Determine uncorrected total loads,

$$[FUT] = [F1] + [F0] = \begin{bmatrix} AF(I,1) + AF0(I) \\ SF(I,1) + SF0(I) \\ NF(I,1) + NF0(I) \\ RM(I,1) + RM0(I) \\ PM(I,1) + PM0(I) \\ YM(I,1) + YM0(I) \end{bmatrix}$$

(Eq. D-19)

Correct for interactions[3]

---

[3] Smith, David L.: An Efficient Algorithm using Matrix Methods to Solve Wind-Tunnel Force-Balance Equations. NASA TN D-6860, 1972.

a. $[FUT] = [C_1] * [FT] + [C_2] * [FP]$ (Eq. D-20)

where $[C_1]$ and $[C_2]$ are balance interaction constants

b. Therefore

(Eq. D-21)

$$[FT] = [C_1]^{-1} * [FUT] - [C_1]^{-1} * [C_2] * [FP]$$

Compute corrected delta balance loads,

$$[F2] = [FT] - [F0] = \begin{bmatrix} AF(I,2) \\ SF(I,2) \\ NF(I,2) \\ RM(I,2) \\ PM(I,2) \\ YM(I,2) \end{bmatrix} = \begin{bmatrix} AFT(I) & - AF0(I) \\ SFT(I) & - SF0(I) \\ NFT(I) & - NF0(I) \\ RMT(I) & - RM0(I) \\ PMT(I) & - PM0(I) \\ YMT(I) & - YM0(I) \end{bmatrix}$$

(Eq. D-22)

10. Correct forces and moments for high model restraints coupled with high balance interactions

$$[F3] = [F2] + K[F1] = \begin{bmatrix} AF(I,3) \\ SF(I,3) \\ NF(I,3) \\ RM(I,3) \\ PM(I,3) \\ YM(I,3) \end{bmatrix} = \begin{bmatrix} AF(I) & + (HIRAF)AF(I,1) \\ SF(I) & + (HIRSF)SF(I,1) \\ NF(I) & + (HIRNF)NF(I,1) \\ RM(I) & + (HIRRM)RM(I,1) \\ PM(I) & + (HIRPM)PM(I,1) \\ YM(I) & + (HIRYM)YM(I,1) \end{bmatrix}$$

(Eq. D-23)

11. Depending on the value of the constant KMOM, balance components are further corrected for balance/bellows interactions and momentum flow effects.

If KMOM = 0,

no further balance corrections are applied and equations D-26 to D-33 are skipped.

If KMOM > 0

$$\begin{bmatrix} AF \\ SF \\ NF \\ RM \\ PM \\ YM \end{bmatrix} = \begin{bmatrix} AF(I,3) \\ SF(I,3) \\ NF(I,3) \\ RM(I,3) \\ PM(I,3) \\ YM(I,3) \end{bmatrix}$$

(Eq. D-24)

Balance/bellows interactions and momentum flow effects on the balance are computed after high restraint corrections.

PTZERO	=	PTANKG	if MCODE = 1 or 3
PTZERO	=	PTANKH	if MCODE = 2 or 4
PTZERO	=	PTKSON	if MCODE = 5

DELP = PCH(1) - PTZERO (Eq. D-25)

If PTJZPO is less than or equal to 1.2 then DELP = 0.0

Where PTJZPO is the weighted average of the nozzle pressure ratios for the primary air system. (Normally air system number 1.)

```
DELSQ   =   DELP * DELP
AREA    =   XK(8,3)/12.0
ASQ     =   AREA * AREA
FNO     =   XK(6,3)/12.0
PMO     =   XK(7,3)/12.0
XNSQ    =   FNO * FNO
XPSQ    =   PMO * PMO
```

```
TAREN =  XK(1,1) + XK(2,1) * FN + XK(3,1) * PM + XK(4,1) * RM + XK(5,1) * YM
         + XK(6,1) * SF + DELP * (XK(46,1) + XK(47,1) * FN + XK(48,1) * PM
         + XK(49,1) * RM + XK(50,1) * YM + XK(51,1) * SF + FNO * XK(52,1)
         + XNSQ * XK(53,1) + PMO * XK(54,1) + XPSQ * XK(55,1) + AREA * (XK(56,1)
         + XK(57,1) * FN + XK(58,1) * PM + XK(59,1) * RM + XK(60,1) * YM
         + XK(61,1) * SF) + ASQ(XK(62,1) + XK(63,1) * FN + XK(64,1) * PM
         + XK(65,1) * RM + XK(66,1) * YM + XK(67,1) * SF))
```

(Eq. D-26)

```
TAREA =  XK(7,1) + XK(8,1) * FN + XK(9,1) * PM + XK(10,1) * RM + XK(11,1) * YM
         + XK(12,1) * SF
```

(Eq. D-27)

Then for PTJZPO greater than or equal to 1.2, the value of PTJZPO is the weighted average value of the nozzle pressure ratios for the primary air system.

TAREA = TAREA + XK(37,1) + XK(38,1) * DELP + XK(39,1) * DELSQ + AREA * (XK(40,1) + XK(41,1) * DELP + XK(42,1) * DELSQ) + ASQ * (XK(43,1) + XK(44,1) * DELP + XK(45,1) * DELSQ)

(Eq. D-28)

TAREP = XK(13,1) + XK(14,1) * FN + XK(15,1) * PM + XK(16,1) * RM + XK(17,1) * YM + XK(18,1) * SF + DELP * (XK(68,1) + XK(69,1) * FN + XK(70,1) * PM + XK(71,1) * RM + XK(72,1) * YM + XK(73,1) * SF + FNO * XK(74,1) + XNSQ * XK(75,1) + PMO * XK(1,2) + XPSQ * XK(2,2) + AREA * (XK(3,2) + XK(4,2) * FN + XK(5,2) * PM + XK(6,2) * RM + XK(7,2) * YM + XK(8,2) * SF) + ASQ * (XK(9,2) + XK(10,2) * FN + XK(11,2) * PM + XK(12,2) * RM + XK(13,2) * YM + XK(14,2) * SF))

(Eq. D-29)

TARER = XK(19,1) + XK(20,1) * FN + XK(21,1) * PM + XK(22,1) * RM + XK(23,1) * YM + XK(24,1) * SF + DELP * (XK(15,2) + XK(16,2) * FN + XK(17,2) * PM + XK(18,2) * RM + XK(19,2) * YM + XK(20,2) * SF + FNO * XK(21,2) + XNSQ * XK(22,2) + PMO * XK(23,2) + XPSQ * XK(24,2) + AREA * (XK(25,2) + XK(26,2) * FN + XK(27,2) * PM + XK(28,2) * RM + XK(29,2) * YM + XK(30,2) * SF) + ASQ * (XK(31,2) + XK(32,2) * FN + XK(33,2) * PM + XK(34,2) * RM + XK(35,2) * YM + XK(36,2) * SF))

(Eq. D-30)

TAREY = XK(25,1) + XK(26,1) * FN + XK(27,1) * PM + XK(28,1) * RM + XK(29,1) * YM + XK(30,1) * SF + DELP * (XK(37,2) + XK(38,2) * FN + XK(39,2) * PM + XK(40,2) * RM + XK(41,2) * YM + XK(42,2) * SF + FNO * XK(43,2) + XNSQ * XK(44,2) + PMO * XK(45,2) + XPSQ * XK(46,2) + AREA * (XK(47,2)

+ XK(48,2) * FN + XK(49,2) * PM + XK(50,2) * RM + XK(51,2) * YM

+ XK(52,2) * SF) + ASQ * (XK(53,2) + XK(54,2) * FN + XK(55,2) * PM

+ XK(56,2) * RM + XK(57,2) * YM + XK(58,2) * SF))

(Eq. D-31)

TARES = XK(31,1) + XK(32,1) * FN + XK(33,1) * PM + XK(34,1) * RM + XK(35,1) * YM

+ XK(36,1) * SF + DELP * (XK(59,2) + XK(60,2) * FN + XK(61,2) * PM

+ XK(62,2) * RM + XK(63,2) * YM + XK(64,2) * SF + FNO * XK(65,2)

+ XNSQ * XK(66,2) + PMO * XK(67,2) + XPSQ * XK(68,2) + AREA * (XK(69,2)

+ XK(70,2) * FN + XK(71,2) * PM + XK(72,2) * RM + XK(73,2) * YM

+ XK(74,2) * SF) + ASQ * (XK(75,2) + XK(1,3) * FN + XK(2,3) * PM

+ XK(3,3) * RM + XK(4,3) * YM + XK(5,3) * SF))

(Eq. D-32)

$$[F3] = \begin{bmatrix} AF(I,3) \\ SF(I,3) \\ NF(I,3) \\ RM(I,3) \\ PM(I,3) \\ YM(I,3) \end{bmatrix} = \begin{bmatrix} AF(I,3) - TAREA \\ SF(I,3) - TARES \\ NF(I,3) - TAREN \\ RM(I,3) - TARER \\ PM(I,3) - TAREP \\ YM(I,3) - TAREY \end{bmatrix}$$

(Eq. D-33)

12. Perform gravity-to-balance transformations.

Let $[R_I]$ denote specific Euler transformation matrixes

$$\begin{aligned}[F_{bal}] &= [R_{strut}][R_{knuckle}][R_{deflections}][F_g] \\ &= [R_{GB}][F_g]\end{aligned}$$

(Eq. D-34)

where

$[F_{bal}]$ = vector representing balance quantities in balance axis.

$[F_g]$ = vector representing balance quantities in gravity axis.

$[F_{GB}]$ = gravity-to-balance axis transformation matrix.

13. Determine weight tares (attitude loads)

$$\begin{bmatrix} \text{AFTARE} \\ \text{SFTARE} \\ \text{NFTARE} \\ \text{RMTARE} \\ \text{PMTARE} \\ \text{YMTARE} \end{bmatrix} = \begin{bmatrix} w(\sin\theta_g - \sin\theta_0) \\ w(\cos\theta_g \sin\phi_g - \cos\theta_0 \sin\phi_0) \\ -w(\cos\theta_g \cos\phi_g - \cos\theta_0 \cos\phi_0) \\ \text{SFTARE(Z)} - \text{NFTARE(Y)} \\ \text{AFTARE(Z)} + \text{NFTARE(X)} \\ \text{SFTARE(X)} + \text{AFTARE(Y)} \end{bmatrix}$$

(Eq. D-35)

Correct for weight tares (attitude loads)

$$[\text{F4}] = [\text{F3}] - [\text{FTARE}] = \begin{bmatrix} \text{AF(I,4)} \\ \text{SF(I,4)} \\ \text{NF(I,4)} \\ \text{RM(I,4)} \\ \text{PM(I,4)} \\ \text{YM(I,4)} \end{bmatrix} = \begin{bmatrix} \text{AF(I,3)} - \text{AFTARE(I)} \\ \text{SF(I,3)} - \text{SFTARE(I)} \\ \text{NF(I,3)} - \text{NFTARE(I)} \\ \text{RM(I,3)} - \text{RMTARE(I)} \\ \text{PM(I,3)} - \text{PMTARE(I)} \\ \text{YM(I,3)} - \text{YMTARE(I)} \end{bmatrix}$$

(Eq. D-36)

If KMOM = 1,

nonblowing balance corrections are applied and FAMOM(I) is automatically computed along with the values of PTJ/PO and FI, the weighted average values of each air system.

APCH = 0.0

AMOM(I) = 0.0

FJCON/FI = f(PTJ/PO) Table lookup and linear interpolation.

FAMOM(I)=[AF(I,4)]-FI[FJCON/FI]

(Eq. D-37)

The values of FJCON/FI are obtained from an input table which results from averaged Stratford choke nozzle data obtained over many years. Typical table values are given below:

PTJ/PO	FJCON/FI	PTJ/PO	FJCON/FI
1.0	0.0	5.0	0.9700
1.3	0.9820	6.0	0.9600
1.5	0.9905	7.0	0.9500
2.0	0.9960	8.0	0.9425
3.0	0.9920	10.0	0.9300
4.0	0.9815	14.0	0.9125
4.5	0.9760		

A maximum of 15 values can be input to the computer as a T table.

G. <u>Balance Quantities Corrected for Method of Attachment</u>

1. Balance component quantities corrected for method of attachment are named as follows:

$$[F5] = \begin{bmatrix} AF(I,5) \\ SF(I,5) \\ NF(I,5) \\ RM(I,5) \\ PM(I,5) \\ YM(I,5) \end{bmatrix}$$

(Eq. D-38)

Where I = balance number.

2. The constant required from the project engineer is KSIGN(I).

$$[F5] = KSIGN * [F4] = \begin{bmatrix} AF(I,5) \\ SF(I,5) \\ NF(I,5) \\ RM(I,5) \\ PM(I,5) \\ YM(I,5) \end{bmatrix} = \begin{bmatrix} KSIGN(I) * AF(I,4) \\ KSIGN(I) * SF(I,4) \\ KSIGN(I) * NF(I,4) \\ KSIGN(I) * RM(I,4) \\ KSIGN(I) * PM(I,4) \\ KSIGN(I) * YM(I,4) \end{bmatrix}$$

(Eq. D-39)

H. <u>Angle of Attack and Sideslip Angle</u>

1. The following definitions denote various transformation matrixes which are obtained from given orders of Euler rotation angles.

$[R_{WG}]$ = wind-axis-to-gravity-axis transformation matrix

$[R_{GB}]$ = gravity-axis-to-balance-axis transformation matrix. This matrix is established from rotation angles supplied in section F, therefore

$[R_{GB}]$ = [Rstrut] [Rknuckle] [Rdeflection]

$[R_{BM}]$ = balance-axis-to-model axis transformation matrix

2. The constants required from the project engineer are THETAU, PSIU, PSIBI, THETABI and PHIBI.

For wind-to-gravity rotation angles, see Figure D-3.

For balance-to-model rotation angles, see Figure D-4(a).

The matrix $[R_{GB}]$, which transforms a vector in the gravity axis system to the balance axis system, may now be computed by a yaw, pitch, and roll rotation.

$$[R_{GB}] = \begin{bmatrix} R_{11} & R_{12} & R_{13} \\ R_{21} & R_{22} & R_{23} \\ R_{31} & R_{32} & R_{33} \end{bmatrix}$$

$$[R_{GB}] = [R_Z(\phi)][R_Y(\theta)][R_X(\psi)]$$

(Eq. D-40)

$$[R_{GB}] = \begin{bmatrix} 1 & 0 & 0 \\ 0 & \cos\phi & -\sin\phi \\ 0 & \sin\phi & \cos\phi \end{bmatrix} \begin{bmatrix} \cos\theta & 0 & -\sin\theta \\ 0 & 1 & 0 \\ \sin\theta & 0 & \cos\theta \end{bmatrix} \begin{bmatrix} \cos\psi & -\sin\psi & 0 \\ \sin\psi & \cos\psi & 0 \\ 0 & 0 & 1 \end{bmatrix}$$

$$= \begin{bmatrix} \cos\theta & 0 & -\sin\theta \\ -\sin\phi\sin\theta & \cos\phi & -\sin\phi\sin\theta \\ \cos\phi\sin\theta & \sin\phi & \cos\phi\cos\theta \end{bmatrix} \begin{bmatrix} \cos\psi & -\sin\psi & 0 \\ \sin\psi & \cos\psi & 0 \\ 0 & 0 & 1 \end{bmatrix}$$

$$= \begin{bmatrix} \cos\theta\cos\psi & -\sin\psi\cos\theta & -\sin\theta \\ -\sin\phi\sin\theta\cos\psi + \cos\phi\sin\psi & \sin\phi\sin\theta\sin\psi + \cos\phi\cos\psi & -\sin\phi\cos\theta \\ \cos\phi\sin\theta\cos\psi + \sin\phi\sin\psi & -\cos\phi\sin\theta\sin\psi + \sin\phi\cos\psi & -\cos\phi\cos\theta \end{bmatrix}$$

(Eq. D-41)

where θ is pitch angle, ϕ is roll angle, and ψ is yaw angle.

For wind-to-gravity rotation angles, see Figure D-3.

For balance-to-model rotation angles, see Figure D-4(a).

The matrix $[R_{GB}]$, which transforms a vector in the gravity axis system to the balance axis system, may now be computed by a roll, yaw, and pitch rotation. The result is the final rotation matrix from the wind axis to model axis.

$$[R_{WM}] = [R_{BM}][R_{GB}][R_{WG}] = \begin{bmatrix} W_{11} & W_{12} & W_{13} \\ W_{21} & W_{22} & W_{23} \\ W_{31} & W_{32} & W_{33} \end{bmatrix}$$

$$[R_{WM}] = [R_y(\theta)][R_Z(\psi)][R_X(\phi)]$$

(Eq. D-42)

$$[R_{WM}] = \begin{bmatrix} \cos\theta & 0 & -\sin\theta \\ 0 & 1 & 0 \\ \sin\theta & 0 & \cos\theta \end{bmatrix} \begin{bmatrix} \cos\psi & -\sin\psi & 0 \\ \sin\psi & \cos\psi & 0 \\ 0 & 0 & 1 \end{bmatrix} \begin{bmatrix} 1 & 0 & 0 \\ 0 & \cos\phi & -\sin\phi \\ 0 & \sin\phi & \cos\phi \end{bmatrix}$$

Performing the matrix multiplcations

$$[R_{WM}] = \begin{bmatrix} \cos\theta\cos\psi & -\cos\theta\sin\psi\cos\phi - \sin\phi\sin\phi & \cos\theta\sin\psi\sin\phi - \sin\theta\cos\phi \\ \sin\psi & \cos\psi\cos\phi & -\cos\psi\sin\phi \\ \sin\theta\cos\psi & -\sin\theta\sin\psi\cos\phi + \cos\theta\sin\phi & \sin\theta\sin\psi\sin\phi\cos\theta\cos\phi \end{bmatrix}$$

(Eq. D-43)

A discussion of these matrices is in Gainer, Thomas G. and Hoffman, Sherwood, Summary of Transformation Equations and Equations of Motion Used in Free-flight and Wind-tunnel Data Reduction and Analysis, NASA SP-3070.

Using the definitions shown in Figure D-5 and the above information

$$ALPHA = TAN^{-1}\left(\frac{W_{31}}{W_{11}}\right)$$

(Eq. D-44)

Note that for $\phi = 0°$, $\alpha = \theta$

$$PSI = SIN^{-1}(W_{21})$$ (Eq. D-45)

$$BETA = -PSI$$ (Eq. D-46)

$$THETA = SIN^{-1}(-R_{13})$$ (Eq. D-47)

$$PHI = TAN^{-1}\left(-\frac{R_{23}}{R_{33}}\right)$$ (Eq. D-48)

I. <u>Body Axis Components: Rotation and Translation from Balance-to-Model Axis</u>

1. Balance components rotated to the model (body) axis are named as follows:

Axial	-	FA(1,I)
Side	-	FY(1,I)
Normal	-	FN(1,I)
Roll	-	MX(1,I)
Pitch	-	MY(1,I)
Yaw	-	MZ(1,I)

2. Balance components rotated and translated to the model (body) axis are named as follows:

Axial	-	FA(2,I)
Side	-	FY(2,I)
Normal	-	FN(2,I)
Roll	-	MX(2,I)
Pitch	-	MY(2,I)
Yaw	-	MZ(2,I)

3. The constants required from the project engineer are XBAR, YBAR and ZBAR. (See Figure D-4.(b).)

The matrix is used to transform the components in the balance axis to the model (body) axis system as follows:

$$\begin{bmatrix} FA(1,I) \\ FY(1,I) \\ FN(1,I) \end{bmatrix} = [R_{BM}] \begin{bmatrix} AF(I,5) \\ SF(I,5) \\ NF(I,5) \end{bmatrix}$$

and

$$\begin{bmatrix} -MX(1,I) \\ MY(1,I) \\ -MZ(1,I) \end{bmatrix} = [R_{BM}] \begin{bmatrix} -RM(I,5) \\ PM(I,5) \\ -YM(I,5) \end{bmatrix}$$

(Eq. D-49)

or

$$\begin{bmatrix} FA(1,I) \\ FY(1,I) \\ FN(1,I) \\ MX(1,I) \\ MY(1,I) \\ MZ(1,I) \end{bmatrix} = \begin{bmatrix} b_{11}AF(I,5) + b_{12}SF(I,5) + b_{13}NF(I,5) \\ b_{21}AF(I,5) + b_{22}SF(I,5) + b_{23}NF(I,5) \\ b_{31}AF(I,5) + b_{32}SF(I,5) + b_{33}NF(I,5) \\ b_{11}RM(I,5) - b_{12}pm(I,5) + b_{13}YM(I,5) \\ -b_{21}RM(I,5) + b_{22}PM(I,5) - b_{23}YM(I,5) \\ b_{31}RM(I,5) - b_{32}PM(I,5) + b_{33}YM(I,5) \end{bmatrix}$$

(Eq. D-50)

The components are then translated as follows:

$$\begin{bmatrix} FA(2,I) \\ FY(2,I) \\ FN(2,I) \\ MX(2,I) \\ MY(2,I) \\ MZ(2,I) \end{bmatrix} = \begin{bmatrix} FA(1,I) \\ FY(1,I) \\ FN(1,I) \\ MX(1,I) + FN(1,I) * YBAR - FY(1,I) * ZBAR \\ MY(1,I) - FN(1,I) * XBAR - FA(1,I) * ZBAR \\ MZ(1,I) - FY(1,I) * XBAR - FA(1,I) * YBAR \end{bmatrix}$$

(Eq. D-51)

J. <u>Pressure Corrections to Body Axis Components</u>

1. Base and/or cavity pressures are obtained from the standard program for quantities and are named PBASE(II). Where II = orifice number.

2. Tunnel static pressure is computed in module A and is named PO.

3. Base force and moment tares are named as follows:

Axial	-	FABASE(I)
Side	-	FYBASE(I)
Normal	-	FNBASE(I)
Roll	-	RMBASE(I)

Pitch - PMBASE(I)

Yaw - YMBASE(I)

4. Final body axis components, corrected for base tares, are named as follows:

Axial - FA(I)

Side - FY(I)

Normal - FN(I)

Roll - MX(I)

Pitch - MY(I)

Yaw - MZ(I)

Note that axial force <u>is not</u> corrected for internal (duct) axial force.

5. The constants required from the project engineer are ARPB(II,K) and KPP.

To determine differential base and cavity pressures

$$\Delta PBASE(II) = PBASE((II) - [(PO*(KPP))],$$

(Eq. D-52)

Noting that a positive differential pressure acting on the base of a model causes a thrust, then base pressure force and moment tares are defined as follows:

$$FABASE(I) = -\sum_{II=1}^{n} [\Delta PBASE(II)] * [ARPB(II,1)]$$

(Eq. B-53)

$$FYBASE(I) = -\sum_{II=1}^{n} [\Delta PBASE(II)] * [ARPB(II,2)]$$

(Eq. B-54)

$$FNBASE(I) = -\sum_{II=1}^{n} [\Delta PBASE(II)] * [ARPB(II,3)]$$

(Eq. B-55)

$$RMBASE(I) = -\sum_{II=1}^{n} [\Delta PBASE(II)] * [ARPB(II,4)]$$

(Eq. B-56)

$$PMBASE(I) = -\sum_{II=1}^{n} [\Delta PBASE(II)] * [ARPB(II,5)]$$

(Eq. B-57)

$$YMBASE(I) = -\sum_{II=1}^{n} [\Delta PBASE(II)] * [ARPB(II,6)]$$

(Eq. B-58)

$$\begin{bmatrix} FA(I) \\ FY(I) \\ FN(I) \\ MX(I) \\ MY(I) \\ MZ(I) \end{bmatrix} = \begin{bmatrix} FA(2,I) \\ FY(2,I) \\ FN(2,I) \\ MX(2,I) \\ MY(2,I) \\ MZ(2,I) \end{bmatrix} - \begin{bmatrix} FABASE(I) \\ FYBASE(I) \\ FNBASE(I) \\ RMBASE(I) \\ PMBASE(I) \\ YMBASE(I) \end{bmatrix}$$

(Eq. D-59)

K. <u>Stability Axis Components</u>

1. Force and moment components in the stability axis are called

Drag – FDS(I)
Side – FYS(I)
Lift – FLS(I)
Roll – MXS(I)
Pitch – MYS(I)
Yaw – MZS(I)

where I = balance number.

Note that drag <u>is not</u> corrected for internal (duct) drag.

FDS(I) = [FA(I)] * [COS(ALPHA)] + [FN(I)] * [SIN(ALHPHA)] (Eq. D-60)

FYS(I) = FY(I) (Eq. D-61)

FLS(I) = [FN(I)] * [COS(ALPHA)] - [FA(I)] * [SIN(ALPA)] (Eq. D-62)

MXS(I) = [MX(I)] * [COS(ALPHA)] + [MZ(I)] * [SIN(ALPHA)] (Eq. D-63)

MYS(I) = MY(I) (Eq. D-64)

MZS(I) = [MZ(I)] * [COS(ALPHA)] - [MX(I)] * [SIN(ALPHA)] (Eq. D-65)

L. <u>Wind Axis Components</u>

1. Force and moment components in the wind axis are called

Drag - FD(I)
Crosswind - FC(I)

Lift	-	FL(I)
Roll	-	MXW(I)
Pitch	-	MYW(I)
Yaw	-	MZW(I)

Note that drag <u>is not</u> correct for internal (duct) drag.

FD(I) = [FDS(I)] * [COS(BETA)] - [FYS(I)] * [SIN(BETA)] (Eq. D-66)

FC(I) = [FYS(I)] * [COS(BETA)] + [FDS(I)] * [SIN(BETA)] (Eq. D-67)

FL(I) = FLS(I) (Eq. D-68)

MXW(I) = [MXS(I)] * [COS(BETA)] + [MYS(I)] * [SIN(BETA)] (Eq. D-69)

MYW(I) = [MYS(I)] * [COS(BETA)] - [MXS(I)] * [SIN(BETA)] (Eq. D-70)

MZW(I) = MZS(I) (Eq. D-71)

M. <u>Alternate Reference Axis Components</u>

1. Body axis components rotated and translated to an arbitrary reference axis system are called

Axial	-	FAREF(I)
Side	-	FYREF(I)
Normal	-	FNREF(I)
Roll	-	MXREF(I)

Pitch - MYREF(I)

Yaw - MZREF(I)

where I = balance number.

Note that axial force <u>is</u> corrected for internal (duct) axial force.

2. The transformation matrix for model axis to reference axis rotations is defined as $[R_{MR}]$.

3. The constants required from the project engineer are PSIR, THETAR, PHIR, XREF, YREF, ZREF and SAREAI where I = balance number for model-(body)-to-reference axis rotations.

4. CAI is from module E.

The matrix $[R_{MR}]$ is used to transform the components in the model (body) axis to a reference axis system as follows:

$$FA(I)' = FA(I) - CAI * QO * SAREA(I) \qquad \text{(Eq. D-72)}$$

$$\begin{bmatrix} FAREF(I)' \\ FYREF(I)' \\ FNREF(I)' \end{bmatrix} = [R_{MR}] \begin{bmatrix} FA(I)' \\ FY(I) \\ FN(I) \end{bmatrix}$$

(Eq. D-73)

and

$$\begin{bmatrix} -MXREF(I)' \\ MYREF(I)' \\ -MXREF(I)' \end{bmatrix} = [R_{MR}] \begin{bmatrix} -MX(I) \\ MY(I) \\ -MZ(I) \end{bmatrix}$$

(Eq. D-74)

or

$$\begin{bmatrix} FAREF(I)' \\ FYREF(I)' \\ FNREF(I)' \\ MXREF(I)' \\ MYREF(I)' \\ MZREF(I)' \end{bmatrix} = \begin{bmatrix} m_{11}FA(I)' + m_{12}FY(I) + m_{13}FN(I) \\ m_{21}FA(I)' + m_{22}FY(I) + m_{23}FN(I) \\ m_{31}FA(I)' + m_{32}FY(I) + m_{33}FN(I) \\ m_{11}MX(I) - m_{12}MY(I) + m_{13}MZ(I) \\ -m_{21}MX(I) + m_{22}MY(I) - m_{23}MZ(I) \\ m_{31}MX(I) - m_{32}MY(I) + m_{33}MZ(I) \end{bmatrix} \qquad \text{(Eq. D-75)}$$

The components are now translated as follows:

$$\begin{bmatrix} FAREF(I) \\ FYREF(I) \\ FNREF(I) \\ MXREF(I) \\ MYREF(I) \\ MZREF(I) \end{bmatrix} = \begin{bmatrix} FAREF(I)' \\ FYREF(I)' \\ FNREF(I)' \\ MXREF(I)' + FNREF(I)' * YREF - FYREF(I)' * ZREF \\ MYREF(I)' - FNREF(I)' * XREF - FAREF(I)' * ZREF \\ MZREF(I)' - FYREF(I)' * XREF - FAREF(I)' * YREF \end{bmatrix}$$

(Eq. D-76)

N. <u>Base Force and Moment Tare Coefficients</u>

1. Base force and moment tare coefficients are called

Axial	– CABASE(I)
Side	– CYBASE(I)
Normal	– CNBASE(I)
Roll	– CRMBASE(I)
Pitch	– CPMBASE(I)
Yaw	– CYMBASE(I)

where I = balance number.

2. Free-stream dynamic pressure is defined in module A and is called QO.

3. The constants required from the project engineer are SAREA(I), CHORD(I), and BSPAN(I).

$$\begin{bmatrix} CABASE(I) \\ CYBASE(I) \\ CNBASE(I) \\ CRMBASE(I) \\ CPMBASE(I) \\ CYMBASE(I) \end{bmatrix} = \frac{1}{[QO * SAREA(I)]} \begin{bmatrix} FABASE(I) \\ FYBASE(I) \\ FNBASE(I) \\ [RMBASE(I) / BSPAN(I)] \\ [PMBASE(I) / CHORD(I) \\ [YMBASE(I) / BSPAN(I) \end{bmatrix}$$

(Eq. D-77)

O. <u>Base Pressure Coefficients</u>

1. Base pressure coefficients are called CPBASE(II)

(Eq. D-78)

$$CPBASE(II) = \frac{1}{QO}[\Delta\, PBASE(II)$$

where II = orifice number.

P. <u>Model (Body) Axis Coefficients</u>

1. Model (body) axis coefficients are called

Axial - CA(I)

Side - CY(I)

Normal - CN(I)

Roll - CMX(I)

Pitch - CMY(I)

Yaw - CMZ(I)

where I = balance number.

2. CAI is from module E.

$$\begin{bmatrix} CA(I) \\ CY(I) \\ CN(I) \\ CMX(I) \\ CMY(I) \\ CMZ(I) \end{bmatrix} = \frac{1}{[QO * SAREA(I)]} \begin{bmatrix} FA(I) \\ FY(I) \\ FN(I) \\ [MX(I) / BSPAN(I)] \\ [MY(I) / CHORD(I)] \\ [MZ(I) / BSPAN(I) \end{bmatrix} - \begin{bmatrix} CAI \\ 0 \\ 0 \\ 0 \\ 0 \\ 0 \end{bmatrix}$$

(Eq. D-79)

Q. <u>Stability Axis Coefficients</u>

1. Stability axis coefficients are called

Drag	– CDS(I)
Side	– CYS(I)
Lift	– CLS(I)
Roll	– CMXS(I)
Pitch	– CMYS(I)
Yaw	– CMZS(I)

where I = balance number.

2. CDIS is from module E.

$$\begin{bmatrix} CDS(I) \\ CYS(I) \\ CLS(I) \\ CMXS(I) \\ CMYS(I) \\ CMZS(I) \end{bmatrix} = \frac{1}{[QO * SAREA(I)]} \begin{bmatrix} FDS(I) \\ FYS(I) \\ FLS(I) \\ [MXS(I) / BSPAN(I)] \\ [MYS(I) / CHORD(I)] \\ [MZS(I) / BSPAN(I) \end{bmatrix} - \begin{bmatrix} CAI \\ 0 \\ 0 \\ 0 \\ 0 \\ 0 \end{bmatrix}$$

(Eq. D-80)

R. Wind Axis Coefficients

1. Wind axis coefficients are named

Drag	-	CD(I)
Crosswind	-	CC(I)
Lift	-	CL(I)
Roll	-	CMXW(I)
Pitch	-	CMYW(I)
Yaw	-	CMZW(I)

where I = balance number.

2. CDI is from module E.

$$\begin{bmatrix} CD(I) \\ CC(I) \\ CL(I) \\ CMXW(I) \\ CMYW(I) \\ CMZW(I) \end{bmatrix} = \frac{1}{[QO * SAREA(I)]} \begin{bmatrix} FD(I) \\ FC(I) \\ FL(I) \\ [MXW(I) / BSPAN(I)] \\ [MYW(I) / CHORD(I)] \\ [MZW(I) / BSPAN(I) \end{bmatrix} - \begin{bmatrix} CDI \\ 0 \\ 0 \\ 0 \\ 0 \\ 0 \end{bmatrix}$$

(Eq. D-81)

S. Alternate Reference Axis Coefficients

1. Reference axis coefficients are named

Axial	-	CAREF(I)
Side	-	CYREF(I)
Normal	-	CNREF(I)
Roll	-	CMXREF(I)
Pitch	-	CMYREF(I)
Yaw	-	CMZREF(I)

where I = balance number.

$$\begin{bmatrix} \text{CAREF(I)} \\ \text{CYREF(I)} \\ \text{CNREF(I)} \\ \text{CMXREF(I)} \\ \text{CMYREF(I)} \\ \text{CMZREF(I)} \end{bmatrix} = \frac{1}{[\text{QO} * \text{SAREA(I)}]} \begin{bmatrix} \text{FAREF(I)} \\ \text{FYREF(I)} \\ \text{FNREF(I)} \\ [\text{MXREF(I)} / \text{BSPAN(I)}] \\ [\text{MYREF(I)} / \text{CHORD(I)}] \\ [\text{MZREF(I)} / \text{BSPAN(I)} \end{bmatrix}$$

(Eq. D-82)

T. <u>Miscellaneous Equations</u>

1. Base drag coefficient is called CDBASE(I). Where I = balance number.

   CDBASE(I) = [CABASE(I)] * [COS(ALPHA)] + [CNBASE(I)] * [SIN)(ALPHA)]

   (Eq. D-83)

2. Lift-over-drag ratio in the stability axis is called LS/DS(I).

   LS/DS(I) = CLS(I)/CDS(I) (Eq. D-84)

3. Lift-over-drag ratio in the wind axis is called L/D(I).

   L/D(I) = CL(I)/CD(I) (Eq. D-85)

4. Lift coefficient squared is called CLSQR(I).

   CLSQR(I) = [CLS(I)] * [CLS(I)] (Eq. D-86)

U. Calculation of Initial Weight Tares and Attitude Load Constants

1. The initial weight tares and attitude load constants may be obtained by either of three methods for each strain gage balance.

   a. Method I - Data obtained at an arbitrary series of pitch angles ($2 \leq$ number of pitch angles ≤ 30). This method cannot be used with a balance without an axial force component.

   b. Method II - Data obtained at an arbitrary series of roll angles ($4 \leq$ number of roll angles ≤ 30). Normally, the roll angles will be 0°, 90°, 180°, and 270°. The roll angle must be specified in a digital channel with name PHIK or with PHIS. (Note that this method must be used for balances without an axial force component). This method cannot be used with a balance that does not have a rolling moment coefficient.

   c. Method III - Data obtained at an arbitrary series of roll and pitch angles, (number of angles ≤ 30)

V. Calculation of Initial Weight Tares and Attitude Load Tares (Strain Gage Balance)

1. Calculate

   a. $K_{A,1} = \cos\phi_o \cos\theta_o$ (Eq. D-87)

   b. $K_{A,2} = \sin\theta_o$ (Eq. D-88)

   c. $K_{A,3} = \sin\phi_o \cos\theta_o$ (Eq. D-89)

2. Determine from balance deck number of components and what these components are.

3. Determine maximum value of each equipment over entire tare run.

   a. FNMAX(I) = ABS(NF(I,1))max (Eq. D-90)

   b. FAMAX(I) = ABS(AF(I,1))max (Eq. D-91)

   c. FYMAX(I) = ABS(SF(I,1))max (Eq. D-92)

   d. PMMAX(I) = ABS(PM(I,1))max (Eq. D-93)

   e. RMMAX(I) = ABS(RM(I,1))max (Eq. D-94)

   f. YMMAX(I) = ABS(YM(I,1))max (Eq. D-95)

4. Initialize initial weight tares and attitude load constants.

   a. Set $\Delta A = \Delta N = \Delta Y = 0$

   $\Delta m_1 = \Delta m_2 = \Delta n_1 = \Delta n_2 = \Delta \ell_1 = \Delta \ell_2 = 0$

   $x = y = z = 0$

   (Eq. D-96)

   b. Assume NF0(I) = AF0(I) = PM0(I) = RM0(I) = YM0(I) = SF0(I) = 0. (Eq. D-97)

5. For each data point correct balance quantities for interactions. Determine uncorrected total loads, [FUT]

$$[FUT] = [F1] + [F0] = \begin{bmatrix} AF(I,1) + AF0(I) \\ SF(I,1) + SF0(I) \\ NF(I,1) + NF0(I) \\ RM(I,1) + RM0(I) \\ PM(I,1) + PM0(I) \\ YM(I,1) + YM0(I) \end{bmatrix}$$

(Same as Eq. D-19)

Correct for interactions (see footnote 3)

a. $[FUT] = [C_1] * [FT] + [C_2] * [FP]$ (Same as Eq. D-20)

where $[C_1]$ and $[C_2]$ are balance interaction constants

b. Therefore

$$[FT] = [C_1]^{-1} * [FUT] - [C_1]^{-1} * [C_2] * [FP]$$ (Same as Eq. D-21)

Compute corrected delta balance loads, [F2]

$$[F2] = [FT] - [F0] = \begin{bmatrix} AF(I,2) \\ SF(I,2) \\ NF(I,2) \\ RM(I,2) \\ PM(I,2) \\ YM(I,2) \end{bmatrix} = \begin{bmatrix} AFT(I) & - AF0(I) \\ SFT(I) & - SF0(I) \\ NFT(I) & - NF0(I) \\ RMT(I) & - RM0(I) \\ PMT(I) & - PM0(I) \\ YMT(I) & - YM0(I) \end{bmatrix}$$

(Same as Eq. D-22)

Correct forces and moments for high model restraints coupled with high balance interactions

$$[F3] = [F2] + K[F1] = \begin{bmatrix} AF(I,3) \\ SF(I,3) \\ NF(I,3) \\ RM(I,3) \\ PM(I,3) \\ YM(I,3) \end{bmatrix} = \begin{bmatrix} AF(I,2) & + (HIRAF)AF(I,1) \\ SF(I,2) & + (HIRSF)SF(I,1) \\ NF(I,2) & + (HIRNF)NF(I,1) \\ RM(I,2) & + (HIRRM)RM(I,1) \\ PM(I,2) & + (HIRPM)PM(I,1) \\ YM(I,2) & + (HIRYM)YM(I,1) \end{bmatrix}$$

(Same as Eq. D-23)

6. Determine balance rotation from gravity axis.

   a. Determine rotation matrix for each matrix. See first part of this module.

   b. Determine $[R_{GB}]$ = product of each individual rotation

   c. Then:

$$R_{GB} = \begin{bmatrix} \cos\theta\cos\psi & -\sin\psi\cos\theta & -\sin\theta \\ -\sin\phi\sin\theta\cos\psi + \cos\phi\sin\psi & \sin\phi\sin\theta\sin\psi + \cos\phi\cos\psi & -\sin\phi\cos\theta \\ \cos\phi\sin\theta\cos\psi + \sin\phi\sin\psi & +\cos\phi\sin\theta\sin\psi + \sin\phi\cos\psi & -\cos\phi\cos\theta \end{bmatrix}$$

(Eq. D-98)

   d.

$$[R_{GB}] = \begin{bmatrix} R(1,1) & R(1,2) & R(1,3) \\ R(2,1) & R(2,2) & R(2,3) \\ R(3,1) & R(3,2) & R(3,3) \end{bmatrix}$$

(Eq. D-99)

   e. calculate

$$THETA = SIN^{-1}(-R(1,3))$$

$$PHI = TAN^{-1}\left(-\frac{R(2,3)}{R(3,3)}\right)$$

(Same as Eq. D-46 thru Eq. D-47)

W. <u>Calculation of Attitude Load Constants by Method I</u>

1. Solve following matrix equation using a least squares technique (MINFIT[4] routine) for ΔA.

$$\begin{vmatrix} \left(-R(1,3)-K_{A,2}\right)_1 \\ \left(-R(1,3)-K_{A,2}\right)_2 \\ \bullet \\ \bullet \\ \bullet \\ \left(-R(1,3)-K_{A,2}\right)_k \end{vmatrix} \begin{vmatrix} \\ \\ \\ \Delta A \\ \\ \\ \end{vmatrix} = \begin{vmatrix} (A_3)_1 \\ (A_3)_2 \\ \bullet \\ \bullet \\ \bullet \\ (A_3)_k \end{vmatrix}$$

(Eq. D-100)

where k is the number of data points ≤ 30

2. $\Delta N = \Delta A + \Delta w$

$\Delta Y = \Delta N$ (Eq. D-101)

where Δw is obtained from balance interaction deck

3. If PMMAX(I) > YMMAX(I) and > RMMAX(I)

   a. Solve following matrix equation using least squares technique for Δm_1 and Δm_2.

[4] Golub, G. H. and Reinsch, C. Numer: Singular Value Decomposition and Least Squares Solutions. Math 14 403-420 (1970) Reprinted in Wilkinson, J. H. and Reinsch, C., Linear Algebra, Springer Verlag, Berlin, (1971).

$$\begin{vmatrix} (K_{A,1} - R(3,3))_1 & (-R(1,3) - K_{A,2})_1 \\ (K_{A,1} - R(3,3))_2 & (-R(1,3) - K_{A,2})_2 \\ \bullet & \bullet \\ \bullet & \bullet \\ (K_{A,1} - R(3,3))_k & (-R(1,3) - K_{A,2})_k \end{vmatrix} \begin{vmatrix} \Delta m_1 \\ \Delta m_2 \end{vmatrix} = \begin{vmatrix} (m_3)_1 \\ (m_3)_2 \\ \bullet \\ \bullet \\ (m_3)_k \end{vmatrix}$$

(Eq. D-102)

b. $x = \dfrac{\Delta m_1}{\Delta N}$ (Eq. D-103)

c. $z = \dfrac{\Delta m_2}{\Delta A}$ (Eq. D-104)

d. $\Delta \ell_2 = \Delta m_2$ (Eq. D-105)

e. $\Delta n_1 = \Delta m_1$ (Eq. D-106)

f. If YMMAX(I) > RMMAX(I) solve the following equation for Δn_2 and $\Delta \ell_1$.

$$\begin{vmatrix} (-R(1,3) - K_{A,2})_1 \\ (-R(1,3) - K_{A,2})_2 \\ \bullet \\ \bullet \\ (-R(1,3) - K_{A,2})_k \end{vmatrix} \begin{vmatrix} \Delta n_2 \end{vmatrix} = \begin{vmatrix} (n_3 + \Delta n_1 (R(2,3) + K_{A,3}))_1 \\ (n_3 + \Delta n_1 (R(2,3) + K_{A,3}))_2 \\ \bullet \\ \bullet \\ (n_3 + \Delta n_1 (R(2,3) + K_{A,3}))_k \end{vmatrix}$$

(Eq. D-107)

and $\Delta \ell_1 = \Delta n_2$

g. If RMMAX(I) > YMMAX(I), solve the following equations for $\Delta\ell_1$ and Δn_2

$$\begin{vmatrix} (R(3,3)-K_{A,1})_1 \\ (R(3,3)-K_{A,1})_2 \\ \bullet \\ \bullet \\ (R(3,3)-K_{A,1})_k \end{vmatrix} \begin{vmatrix} \Delta\ell_1 \end{vmatrix} = \begin{vmatrix} [+\ell_3+\Delta\ell_2(R(2,3)+K_{A,3})]_1 \\ [+\ell_3+\Delta\ell_2(R(2,3)+K_{A,3})]_2 \\ \bullet \\ \bullet \\ [+\ell_3+\Delta\ell_2(R(2,3)+K_{A,3})]_k \end{vmatrix}$$

(Eq. D-108)

and $\Delta n_2 = \Delta\ell_1$

h. $y = +\dfrac{\Delta n_2}{\Delta A}$ (Eq. D-109)

4. If YMMAX(I) > PMMAX(I) and > RMMAX(I)

a. Solve following matrix equation using a least square technique for Δn_1 and Δn_2

$$\begin{vmatrix} (-R(2,3)-K_{A,3})_1 & (-R(1,3)-K_{A,2})_1 \\ (-R(2,3)-K_{A,3})_2 & (-R(1,3)-K_{A,2})_2 \\ \bullet & \bullet \\ \bullet & \bullet \\ \bullet & \bullet \\ (-R(2,3)-K_{A,3})_k & (-R(1,3)-K_{A,2})_k \end{vmatrix} \begin{vmatrix} \Delta n_1 \\ \Delta n_2 \end{vmatrix} = \begin{vmatrix} (n_3)_1 \\ (n_3)_2 \\ \bullet \\ \bullet \\ \bullet \\ (n_3)_k \end{vmatrix}$$

(Eq. D-110)

b. $x = +\frac{\Delta n_1}{\Delta Y}$ (Eq. D-111)

c. $y = +\frac{\Delta n_2}{\Delta A}$ (Eq. D-112)

d. $\Delta \ell_1 = \Delta n_2$ (Eq. D-113)

e. $\Delta m_2 = \Delta n_1$ (Eq. D-114)

f. If PMMAX(I) > RMMAX(I), solve the following equation for Δm_2 and $\Delta \ell_2$

$$\begin{vmatrix} \left(-R(1,3) - K_{A,2}\right)_1 \\ \left(-R(1,3) - K_{A,2}\right)_2 \\ \bullet \\ \bullet \\ \bullet \\ \left(-R(1,3) - K_{A,2}\right)_k \end{vmatrix} \begin{vmatrix} \Delta m_2 \end{vmatrix} = \begin{vmatrix} \left[m_3 - \Delta m_1\left(K_{A,1} - R(3,3)\right)\right]_1 \\ \left[m_3 - \Delta m_1\left(K_{A,1} - R(3,3)\right)\right]_2 \\ \bullet \\ \bullet \\ \bullet \\ \left[m_3 - \Delta m_1\left(K_{A,1} - R(3,3)\right)\right]_k \end{vmatrix}$$

(Eq. D-115)

and $\Delta \ell_1 = \Delta m_2$

g. If RMMAX(I) > PMMAX(I), solve following equations for $\Delta \ell_2$ and $\Delta m2$

$$\begin{vmatrix} (R(2,3)-K_{A,3})_1 \\ (-R(1,3)-K_{A,2})_2 \\ \bullet \\ \bullet \\ \bullet \\ (-R(1,3)-K_{A,2})_k \end{vmatrix} \begin{vmatrix} \Delta\ell_2 \end{vmatrix} = \begin{vmatrix} [+\ell_3-\ell_1(R(3,3)-K_{A,1})]_1 \\ [+\ell_3-\ell_1(R(3,3)-K_{A,1})]_2 \\ \bullet \\ \bullet \\ \bullet \\ [+\ell_3-\ell_1(R(3,3)-K_{A,1})]_k \end{vmatrix}$$

(Eq. D-116)

and $\Delta m_2 = \Delta\ell_2$

h. $z = +\dfrac{\Delta m_2}{\Delta A}$ (Eq. D-117)

5. If RMMAX(I) > PMMAX(I) and > YMMAX(I)

   a. Solve the following matrix equation using a least squares technique for $\Delta\ell_1$ and $\Delta\ell_2$.

$$\begin{vmatrix} (R(3,3)-K_{A,1})_1 & -(R(2,3)+K_{A,3})_1 \\ (R(3,3)-K_{A,1})_2 & -(R(2,3)+K_{A,3})_2 \\ \bullet & \bullet \\ \bullet & \bullet \\ \bullet & \bullet \\ (R(3,3)-K_{A,1})_k & -(R(2,3)+K_{A,3})_k \end{vmatrix} \begin{vmatrix} \Delta\ell_1 \\ \Delta\ell_2 \end{vmatrix} = \begin{vmatrix} +(\ell_3)_1 \\ +(\ell_3)_2 \\ \bullet \\ \bullet \\ \bullet \\ +(\ell_3)_k \end{vmatrix}$$

(Eq. D-118)

   b. $y = \dfrac{\Delta\ell_1}{\Delta N}$ (Eq. D-119)

   c. $z = \dfrac{\Delta\ell_2}{\Delta Y}$ (Eq. D-120)

d. $\Delta n_2 = \Delta \ell_1$ (Eq. D-121)

e. $\Delta m_2 = \Delta \ell_2$ (Eq. D-122)

f. If PMMAX(I) > YMMAX(I), solve the following equation for Δm_1 and Δn_1.

$$\begin{vmatrix} (K_{A,1} - R(3,3))_1 \\ (K_{A,1} - R(3,3))_2 \\ \bullet \\ \bullet \\ \bullet \\ (K_{A,1} - R(3,3))_k \end{vmatrix} \begin{vmatrix} \Delta m_1 \end{vmatrix} = \begin{vmatrix} [m_3 - \Delta m_2(-R(1,3) - K_{A,2})]_1 \\ [m_3 - \Delta m_2(-R(1,3) - K_{A,2})]_2 \\ \bullet \\ \bullet \\ \bullet \\ [m_3 - \Delta m_2(-R(1,3) - K_{A,2})]_k \end{vmatrix}$$

(Eq. D-123)

and $\Delta n_1 = \Delta m_1$

g. If YMMAX(I) > PMMAX(I), solve the following equations for Δn_1 and Δm_1.

$$\begin{vmatrix} -(R(2,3) + K_{A,3})_1 \\ -(R(2,3) + K_{A,3})_1 \\ \bullet \\ \bullet \\ \bullet \\ \bullet \\ -(R(2,3) + K_{A,3})_k \end{vmatrix} \begin{vmatrix} \Delta n_2 \end{vmatrix} = \begin{bmatrix} [n_3 - \Delta n_2(-R(1,3) - K_{A,2})]_1 \\ [n_3 - \Delta n_2(-R(1,3) - K_{A,2})]_2 \\ \bullet \\ \bullet \\ \bullet \\ [n_3 - \Delta n_2(-R(1,3) - K_{A,2})]_k \end{bmatrix}$$

(Eq. D-124)

and $\Delta m_1 = \Delta n_1$

h. $x = \frac{\Delta m_1}{\Delta N}$ (Eq. D-125)

X. <u>Calculation of Attitude Load Constants by Method II</u>

1. If FNMAX(I) > FYMAX(I), solve the following equations for ΔN and ΔY.

$$\begin{vmatrix} (K_{A,1} - R(3,3))_1 \\ (K_{A,1} - R(3,3))_2 \\ \bullet \\ \bullet \\ \bullet \\ \bullet \\ (K_{A,1} - R(3,3))_k \end{vmatrix} \begin{vmatrix} \Delta N \end{vmatrix} = \begin{vmatrix} (N_3)_1 \\ (N_3)_2 \\ \bullet \\ \bullet \\ \bullet \\ \bullet \\ (N_3)_k \end{vmatrix}$$

(Eq. D-126)

and $\Delta Y = \Delta N$

2. If FYMAX(I) > FNMAX, solve the following equations for ΔY and ΔN.

$$\begin{vmatrix} -(R(2,3) + K_{A,3})_1 \\ -(R(2,3) + K_{A,3})_1 \\ \bullet \\ \bullet \\ \bullet \\ \bullet \\ -(R(2,3) + K_{A,3})_k \end{vmatrix} \begin{vmatrix} \Delta Y \end{vmatrix} = \begin{bmatrix} (Y_3)_1 \\ (Y_3)_2 \\ \bullet \\ \bullet \\ \bullet \\ \bullet \\ (Y_3)_k \end{bmatrix}$$

(Eq. D-127)

and $\Delta N = \Delta Y$

3. $\Delta A = \Delta N - \Delta w$ (Eq. D-128)

4. Determine Δm_1, Δm_2, Δn_1, Δn_2, $\Delta \ell_1$, $\Delta \ell_2$, x, y, and z by calculation procedure given in Subsection W., item 3.

Y. Balances Without Six Components

1. For balances that do not have six components, set the appropriate attitude tare constant to zero as indicated below.

   a. If balance does not have a normal-force component: $\Delta N = 0$

   b. If balance does not have an axial-force component: $\Delta A = 0$

   c. If balance does not have a side-force component: $\Delta Y = 0$

   d. If balance does not have a pitching-moment component:

   $$\Delta m_1 = \Delta m_2 = 0$$

   e. If balance does not have a rolling-moment component:

   $$\Delta \ell_1 = \Delta \ell_2 = 0$$

   f. If balance does not have a yawing moment component:

   $$\Delta n_1 = \Delta n_2 = 0$$

Z. Initial Weight Tare Calculations

1. Calculate initial weight tares

   a. $N_o = -\Delta N \, K_{A,1}$ NF0 (Eq. D-129)

   b. $A_o = -\Delta A \, K_{A,2}$ AF0 (Eq. D-130)

c. $m_o = -\Delta m_1 K_{A,1} + \Delta m_2 K_{A,3}$ PM0 (Eq. D-131)

d. $\ell_o = \Delta \ell_1 K_{A,1} + \Delta \ell_2 K_{A,3}$ RM0 (Eq. D-132)

e. $n_o = \Delta n_1 K_{A,3} + \Delta n_2 K_{A,2}$ YM0 (Eq. D-133)

f. $y_o = \Delta Y K_{A,3}$ SF0 (Eq. D-134)

AA. New Values of Initial Weight Tares

1. Go to Subsection V., item 5. and repeat the calculation using new values of initial weight tares. Repeat iteration procedure until initial weight tares repeat to following accuracy.

$$\varepsilon = \frac{\text{New} - \text{Old}}{\text{New}} < 0.005$$

(Eq. D-135)

BB. Point Calculations

1. For each point, calculate:

a. $N_4 = N_3 - \left[\Delta N\left(K_{A,1} - R(3,3)\right)\right]$ (Eq. D-136)

b. $A_4 = A_3 - \left[\Delta A\left(-R(1,3) - K_{A,2}\right)\right]$ (Eq. D-137)

c. $m_4 = m_3 - \left\{\left[\Delta m_1\left(K_{A,1} - R(3,3)\right)\right] - \left[\Delta m_2\left(R(1,3) + K_{A,2}\right)\right]\right\}$

(Eq. D-138)

d. $\ell_4 = \ell_3 - \left\{\left[\Delta\ell_1\left(R(3,3) - K_{A,1}\right)\right] - \left[\Delta\ell_2\left(R(2,3) + K_{A,3}\right)\right]\right\}$

(Eq. D-139)

e. $n_4 = n_3 - \left\{\left[\Delta n_1\left(R(2,3) + K_{A,3}\right)\right] - \left[\Delta n_2\left(R(1,3) + K_{A,2}\right)\right]\right\}$

(Eq. D-140)

f. $Y_4 = Y_3 + \left[\Delta Y\left(R(2,3) + K_{A,3}\right)\right]$

(Eq. D-141)

THETAS (Θ_S) is measured in the tunnel or gravity X–Z plane. ($\Psi_S = 0$).

Θ_S is generally termed tunnel pitch angle.

PHIS (Φ_S) is measured in the tunnel or gravity Y–Z plane. Φ_S is generally termed tunnel roll angle.

PSIS (χ_S) is measured in the tunnel or gravity X–Y plane. χ_S is generally termed tunnel yaw angle.

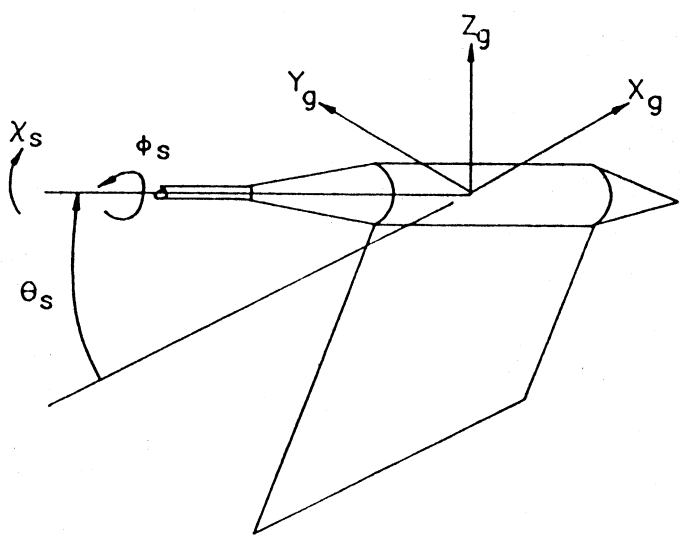

(a) Gravity to tunnel support axes.

Figure D–1. Definition of gravity and balance axes showing positive directions and rotation angles for gravity to balance transformations.

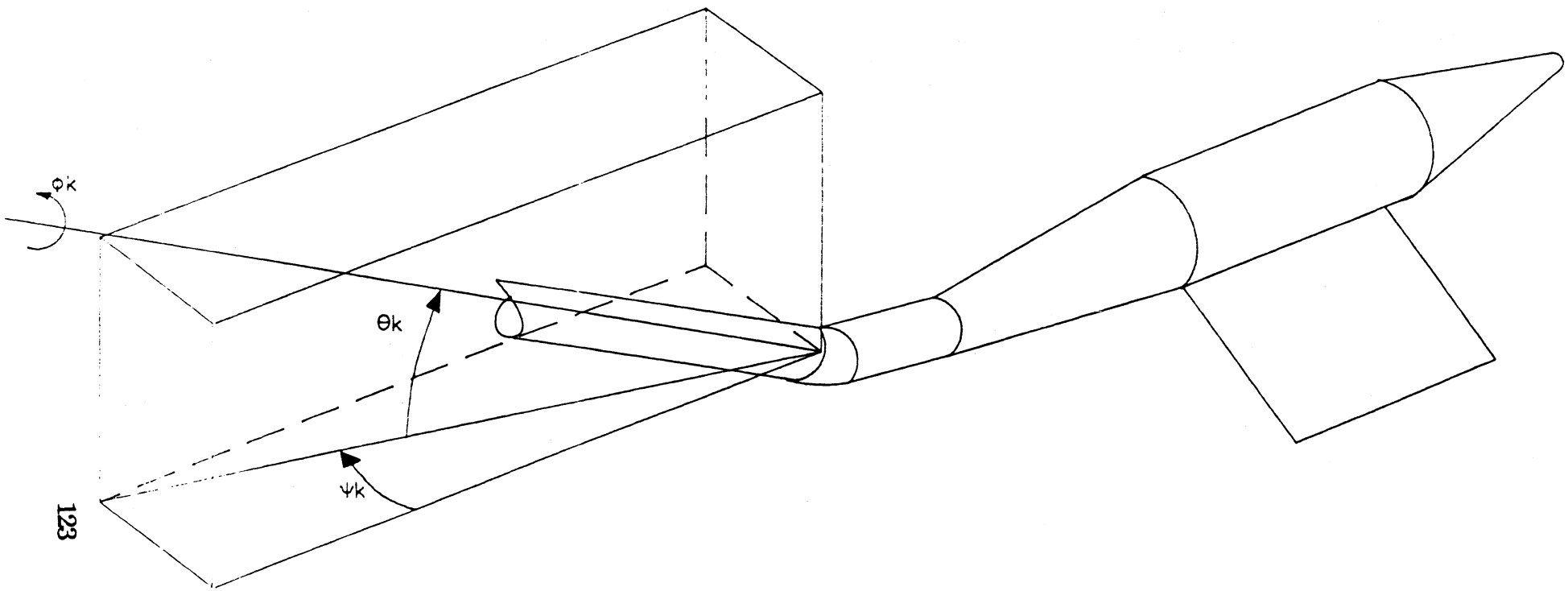

The angles described by this sketch are generally referred to as knuckle angles. However they may also be used to describe unusual balance orientations even though a physical knuckle, as illustrated above, is not installed. Several illustrations are shown on the next figure.

(b) Tunnel support to undeflected balance axes.

Figure D–1. Continued.

Ⓐ
$\psi_k = 0°, \theta_k = 0°, \phi_k = 0°$

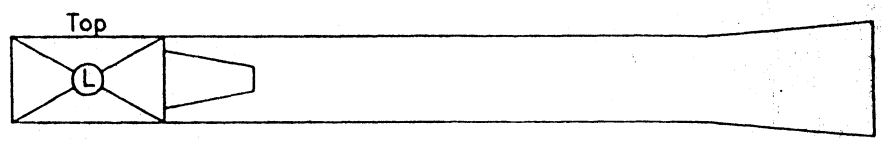

Ⓑ
$\psi_k = 0°, \theta_k = K°, \phi_k = 0°$

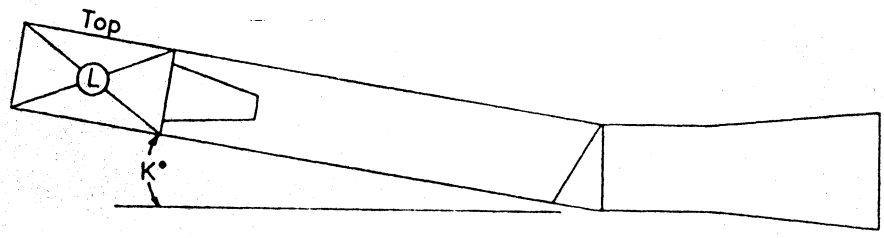

Ⓒ
$\psi_k = 0°, \theta_k = 0°, \phi_k = 180°$

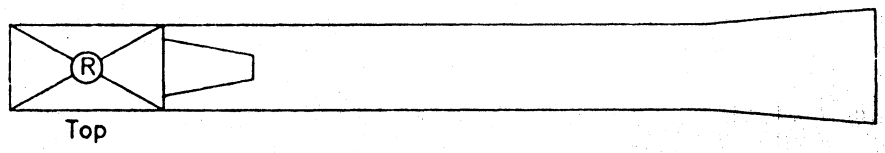

Ⓓ
$\psi_k = 0°, \theta_k = 180°, \phi_k = 0°$

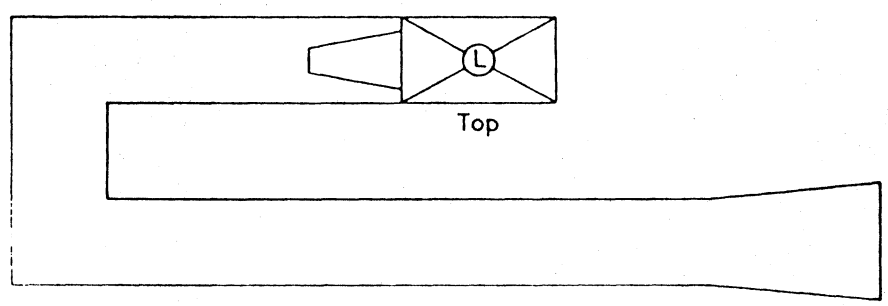

Ⓔ
$\psi_k = 0°, \theta_k = 180° + K°, \phi_k = 180°$
or
$\psi_k = 180°, \theta_k = -K°, \phi_k = 0°$
or
$\theta_k = K°, \psi_k = 180°, \phi_k = 0°$

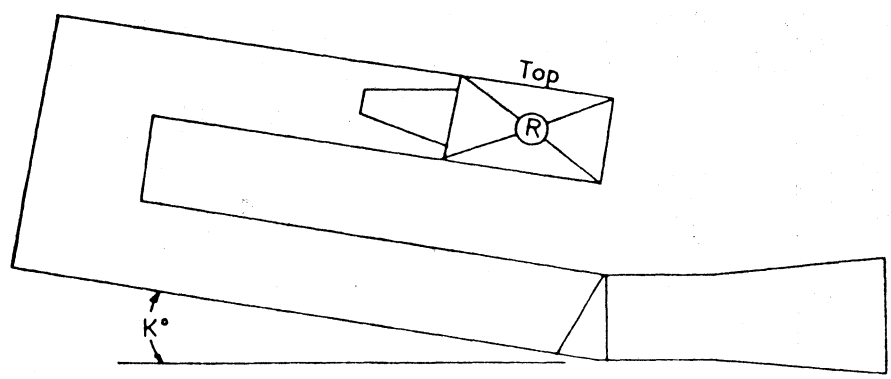

(c) Illustrations of knuckle angles.
Figure D–1. Continued.

Note that the deflection angles are not true Euler angles but are measured from or about the undeflected balance axis. This conflict arises since these angles are calculated from calibrations referenced to the undeflected axis system and are in the form of ∂def./ ∂AF, ∂def./∂NF, ∂def./∂SF, ∂def./∂PM, etc. However, since these angles are small, they are assumed to be equivalent to the true Euler angles.

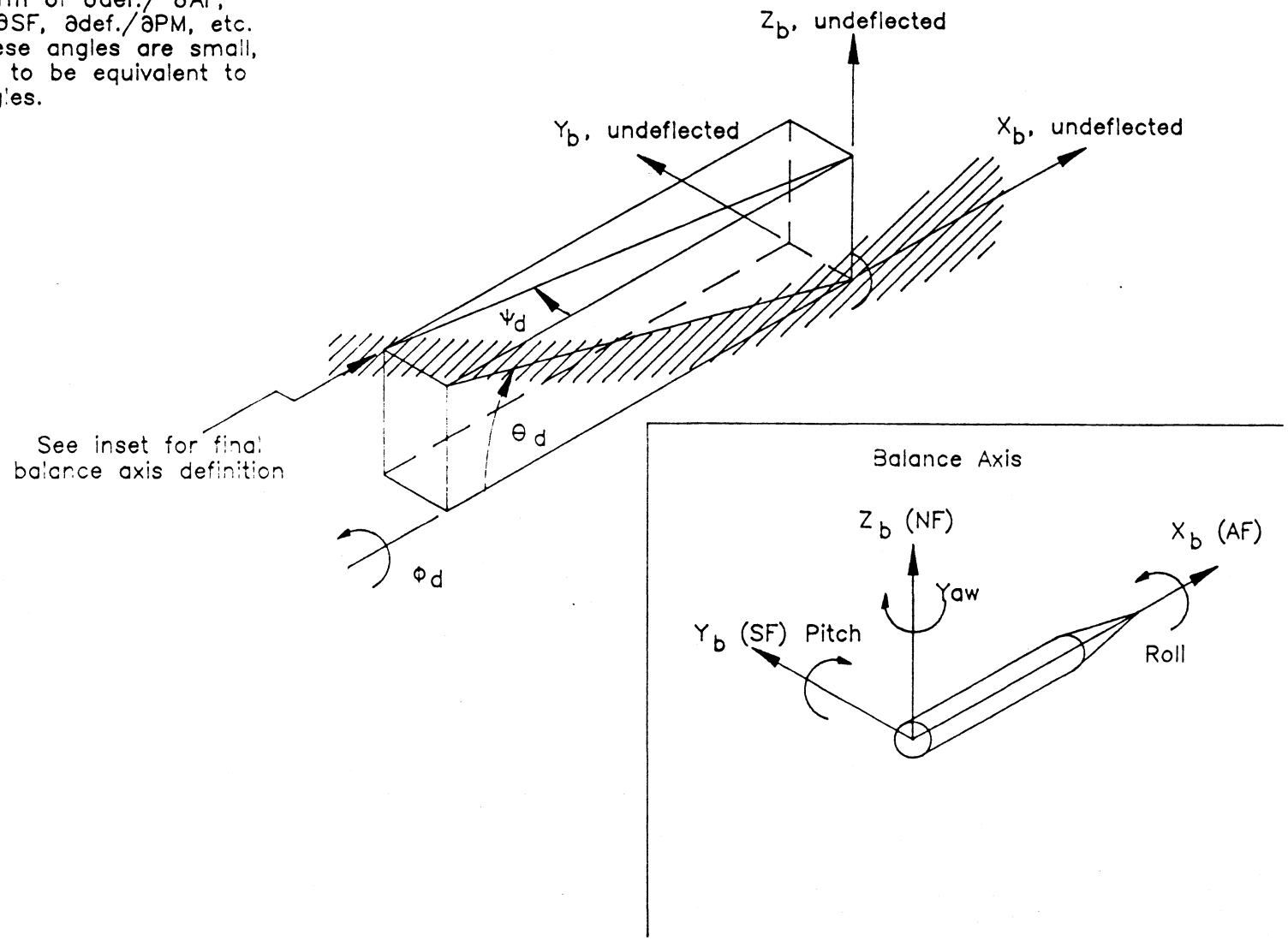

(d) Undeflected balance to balance axes.
Figure D–1. Continued.

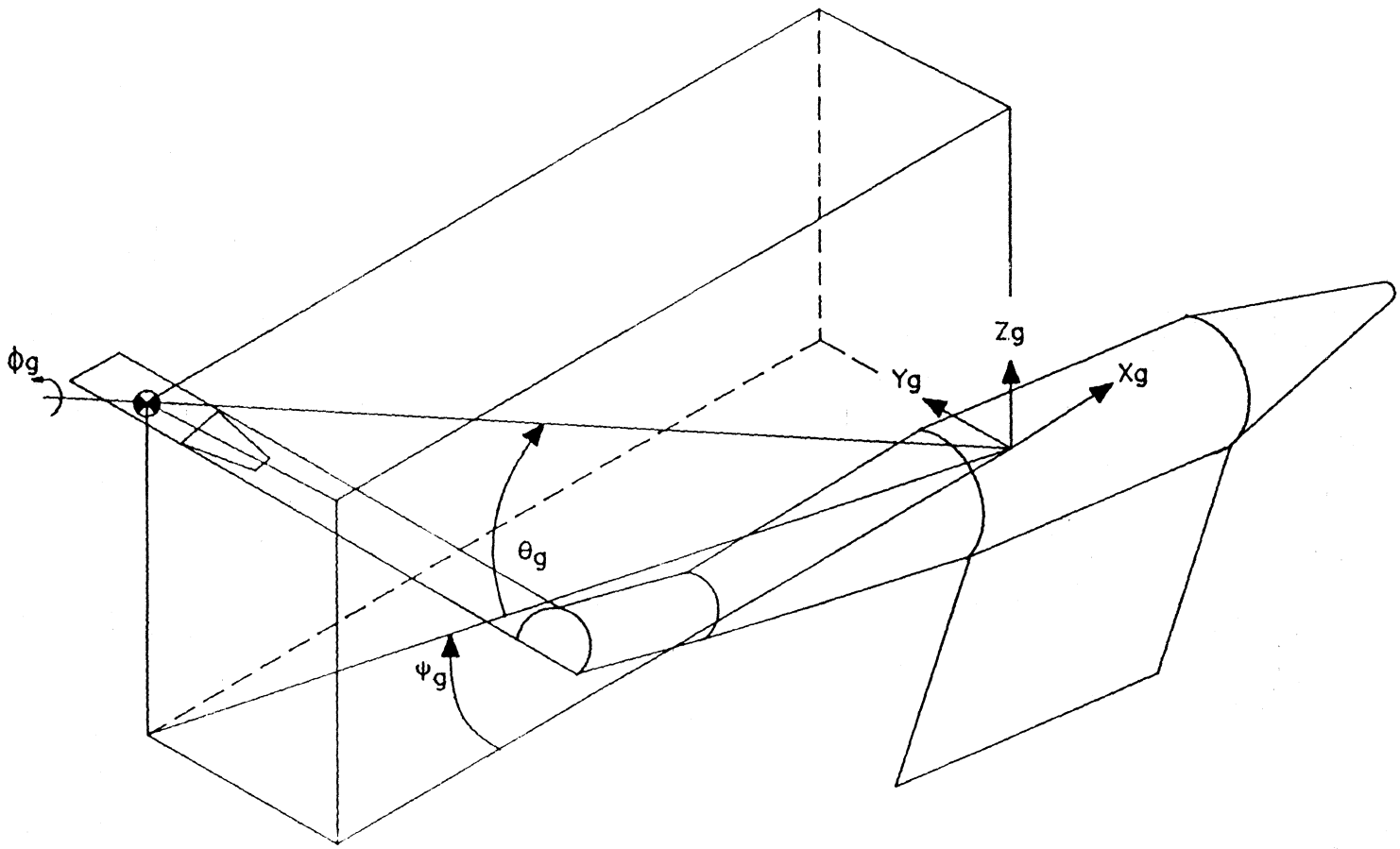

(e) Final balance orientation; gravity to balance axes.

Figure D−1. Continued.

Ⓐ
$\psi_{K2} = 0°$, $\theta_{K2} = 0°$, $\phi_{K2} = 0°$

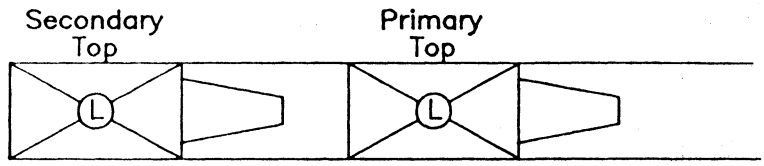

Ⓑ
$\psi_{K2} = 180°$, $\theta_{K2} = 0°$, $\phi_{K2} = 0°$

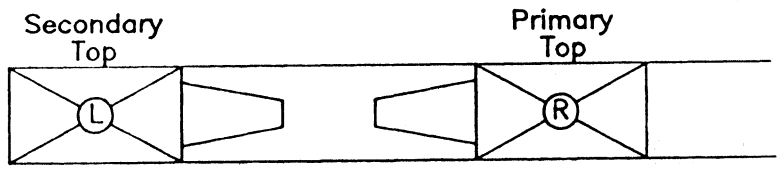

Ⓒ
$\psi_{K2} = 180°$, $\theta_{K2} = 0°$, $\phi_{K2} = 0°$

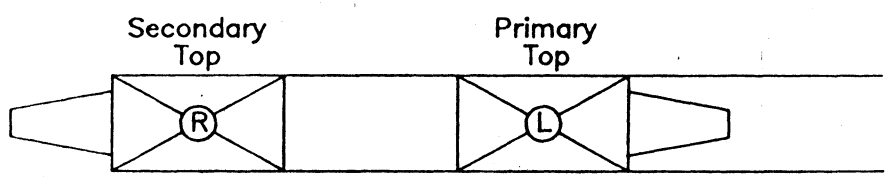

Ⓓ
$\psi_{K2} = 0°$, $\theta_{K2} = 180°$, $\phi_{K2} = 0°$

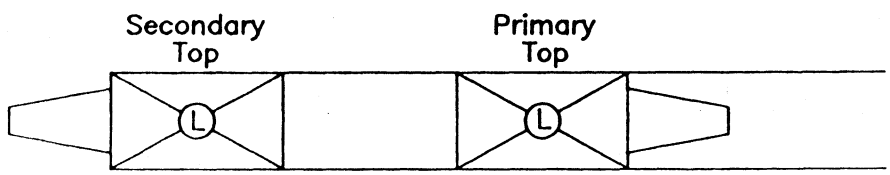

Ⓔ
$\theta_{K2} = K°$, $\psi_{K2} = 180°$, $\phi_{K2} = 0°$

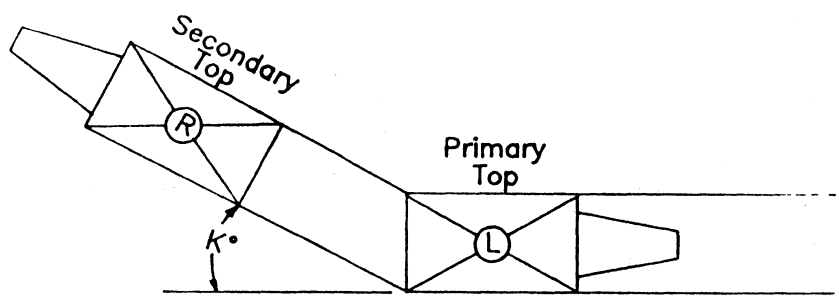

(f) Illustration of primary balance to undeflected secondary balance rotations.

Figure D--1. Continued.

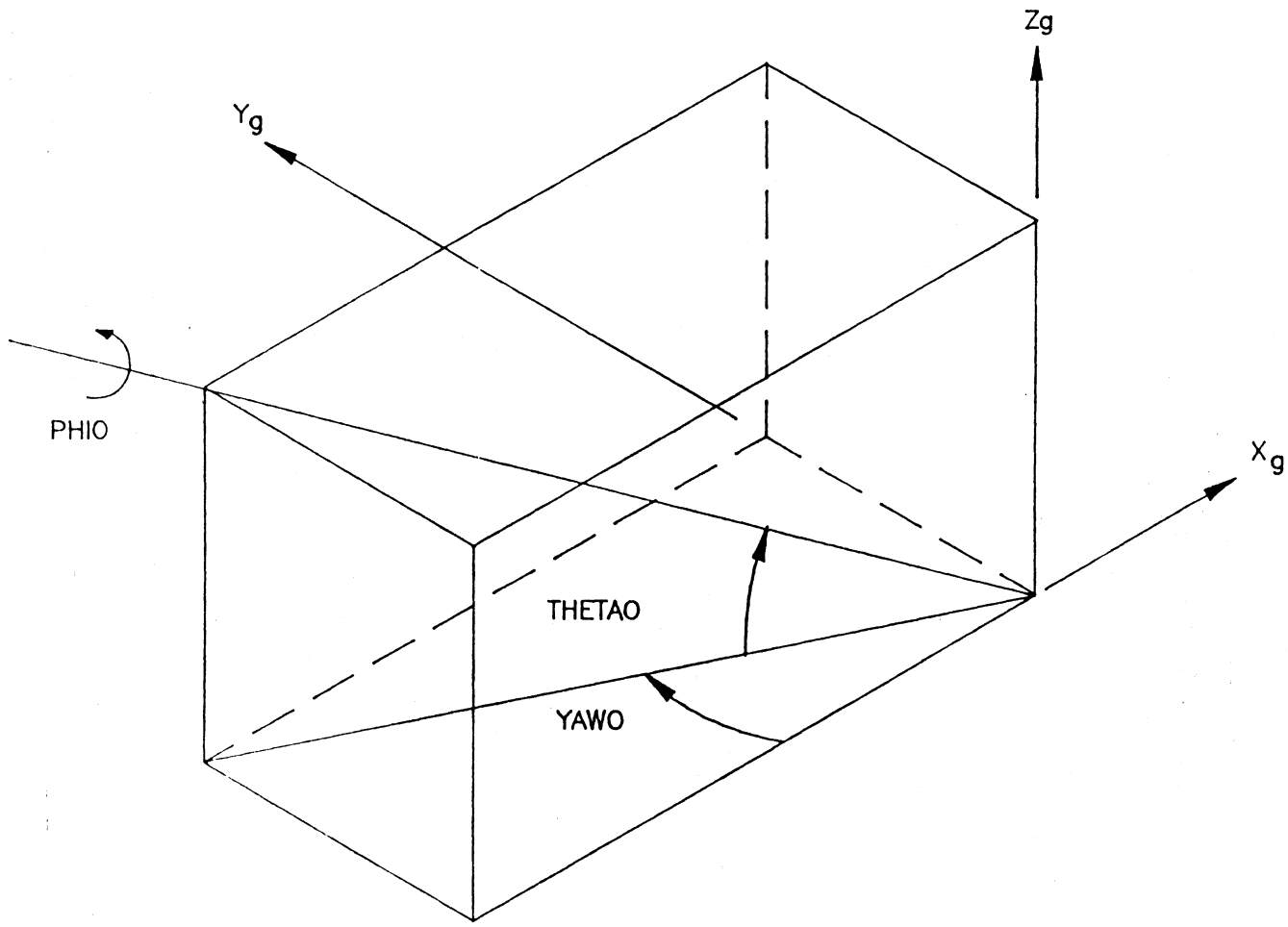

(g) Definition of initial or wind–off balance attitude.
Figure D–1. Concluded.

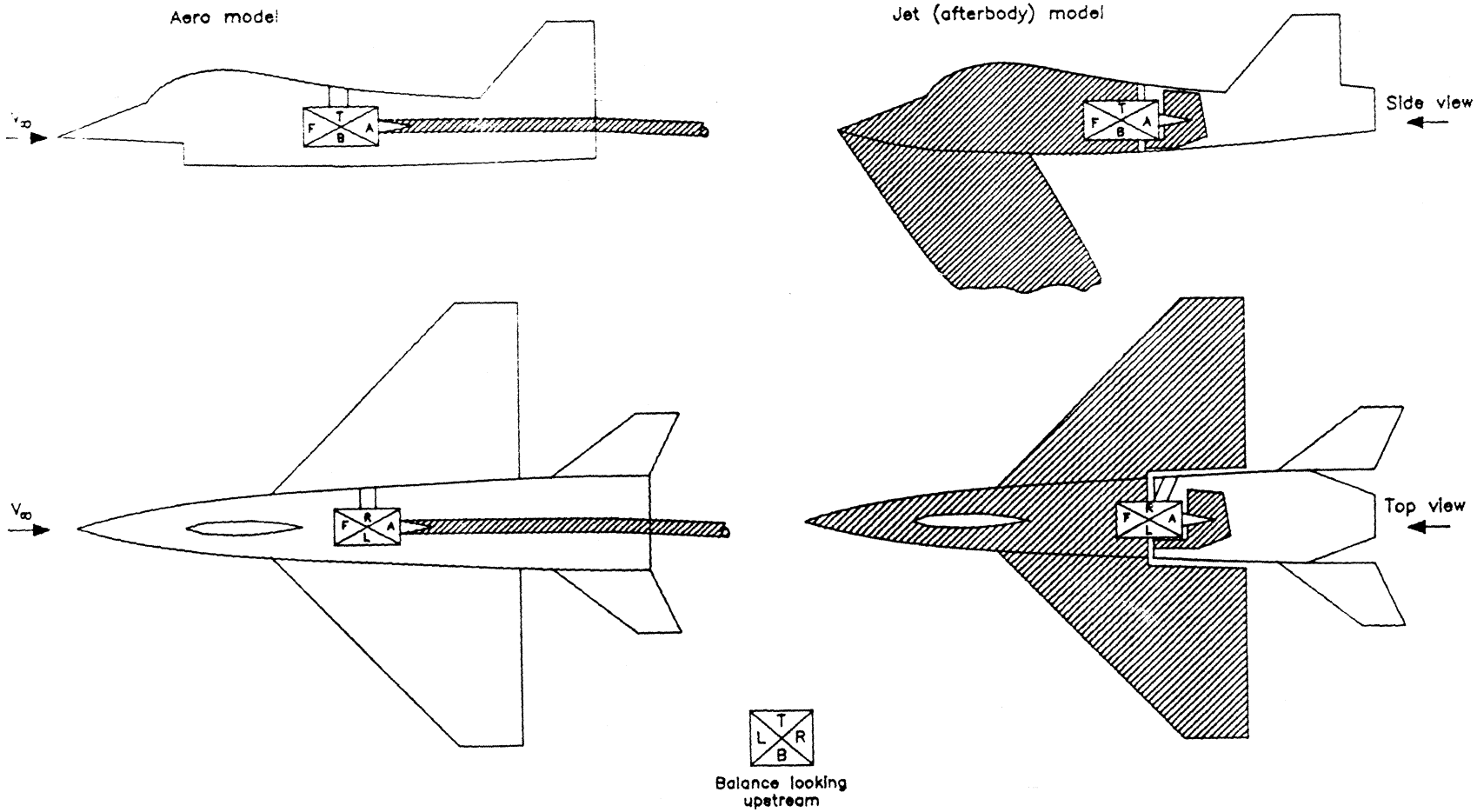

Balance readings

Normal	+	(positive up)
Axial	+	(positive downstream)
Pitch	+	(positive nose up)
Side	+	(positive toward right)
Yaw	+	(positive right wing back)
Roll	+	(positive right wing down)

Model forces

Normal	=NF bal
Axial	=AF bal
Pitch	=PM bal
Side	=Side bal
Yaw	=Yaw bal
Roll	=Roll bal

(a) Case 1, Normal balance arrangement.
Figure D–2. Model–balance orientation stings.

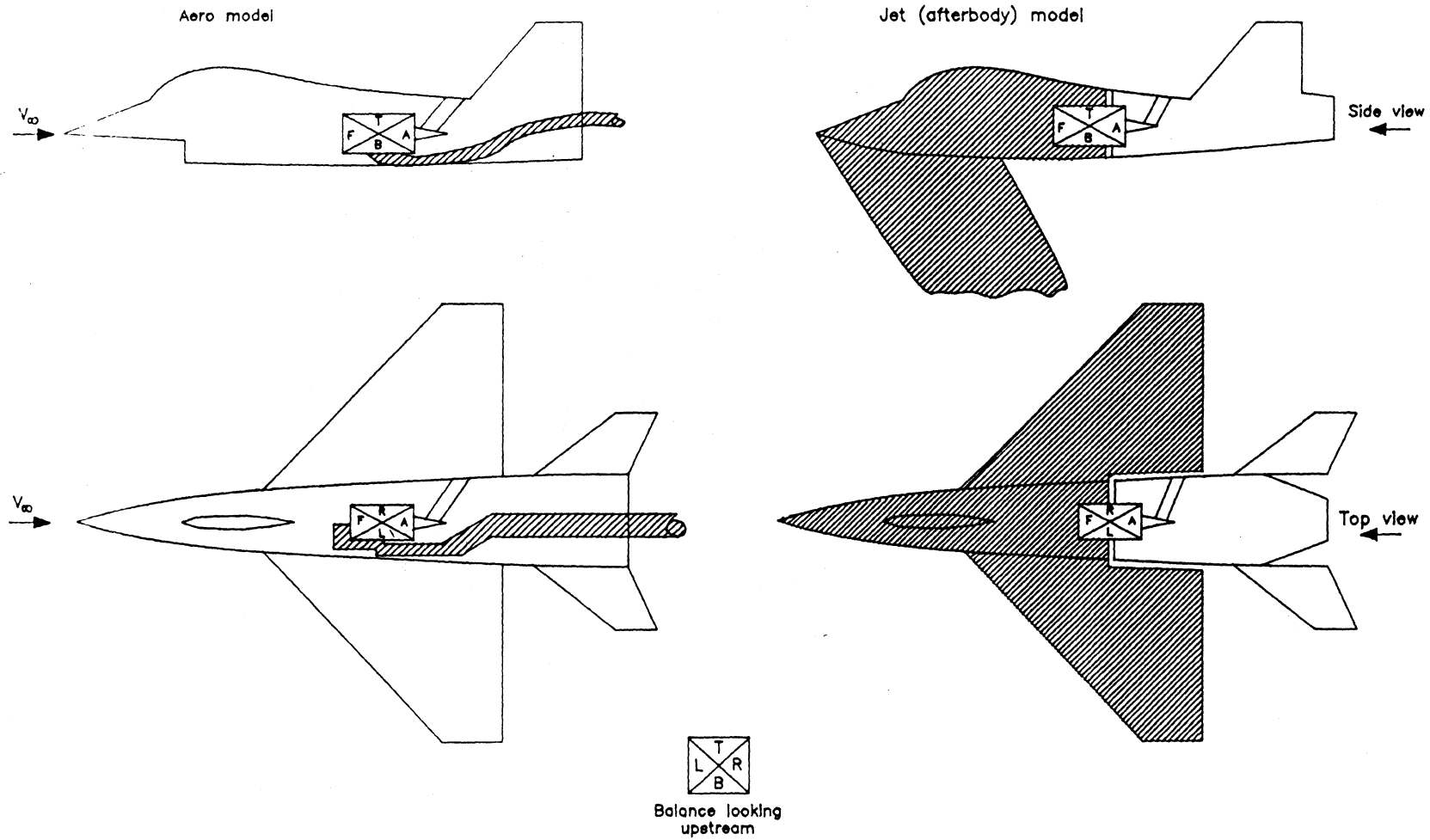

Balance readings

Normal	–
Axial	–
Pitch	–
Side	–
Yaw	–
Roll	–

Model forces

Normal	= –NF bal
Axial	= –AF bal
Pitch	= –PM bal
Side	= –Side bal
Yaw	= –Yaw bal
Roll	= –Roll bal

(b) Case 1A, Case 1 held by opposite end.
Figure D–2. Continued.

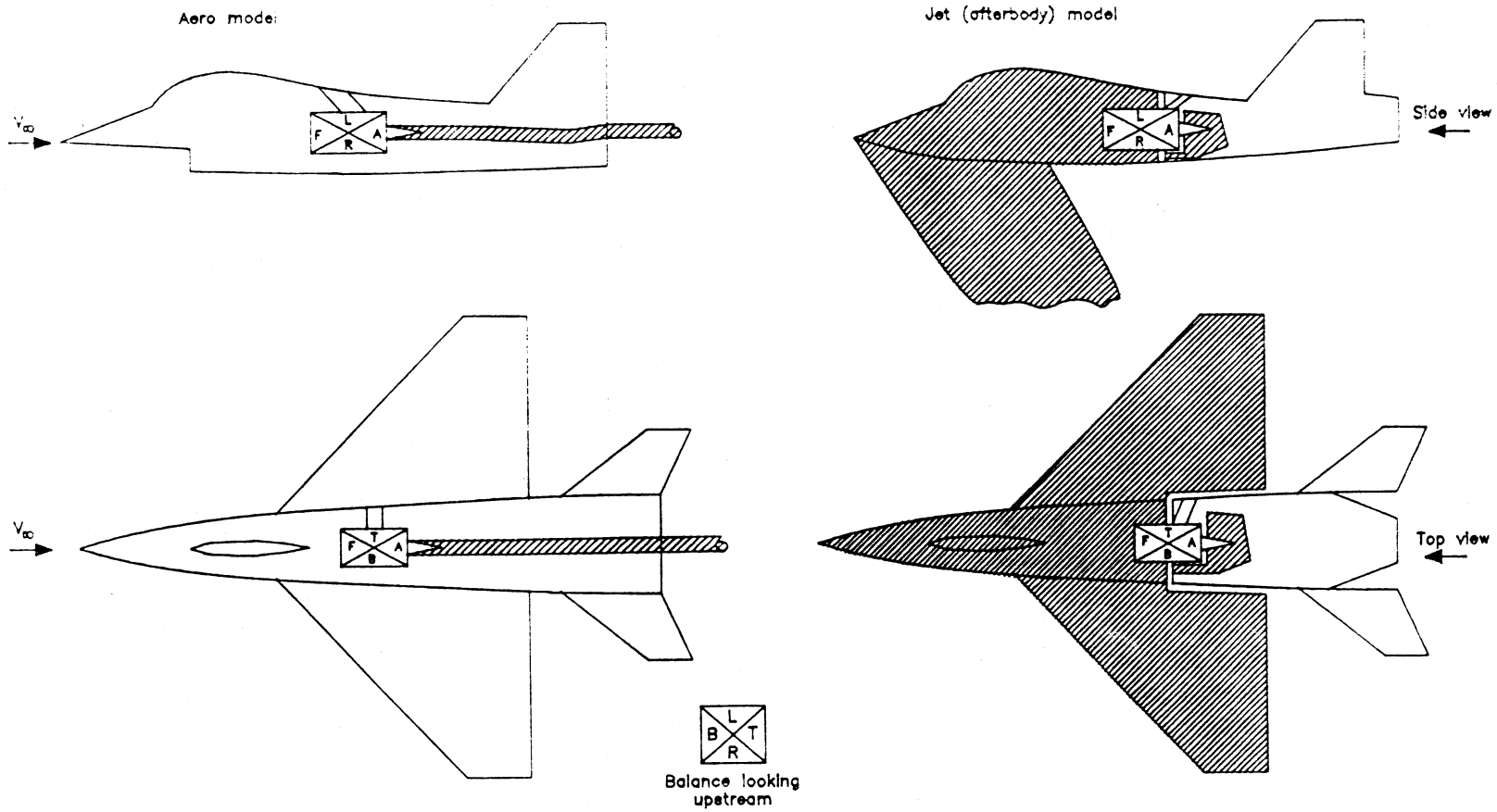

Balance readings

Normal	+
Axial	+
Pitch	+
Side	−
Yaw	−
Roll	+

For positive loads acting on these components

Model forces

Normal	= −Side bal
Axial	= AF bal
Pitch	= −Yaw bal
Side	= NF bal
Yaw	= PM bal
Roll	= Roll bal

(c) Case 2, Balance rolled 90° (clockwise).
Figure D−2. Continued.

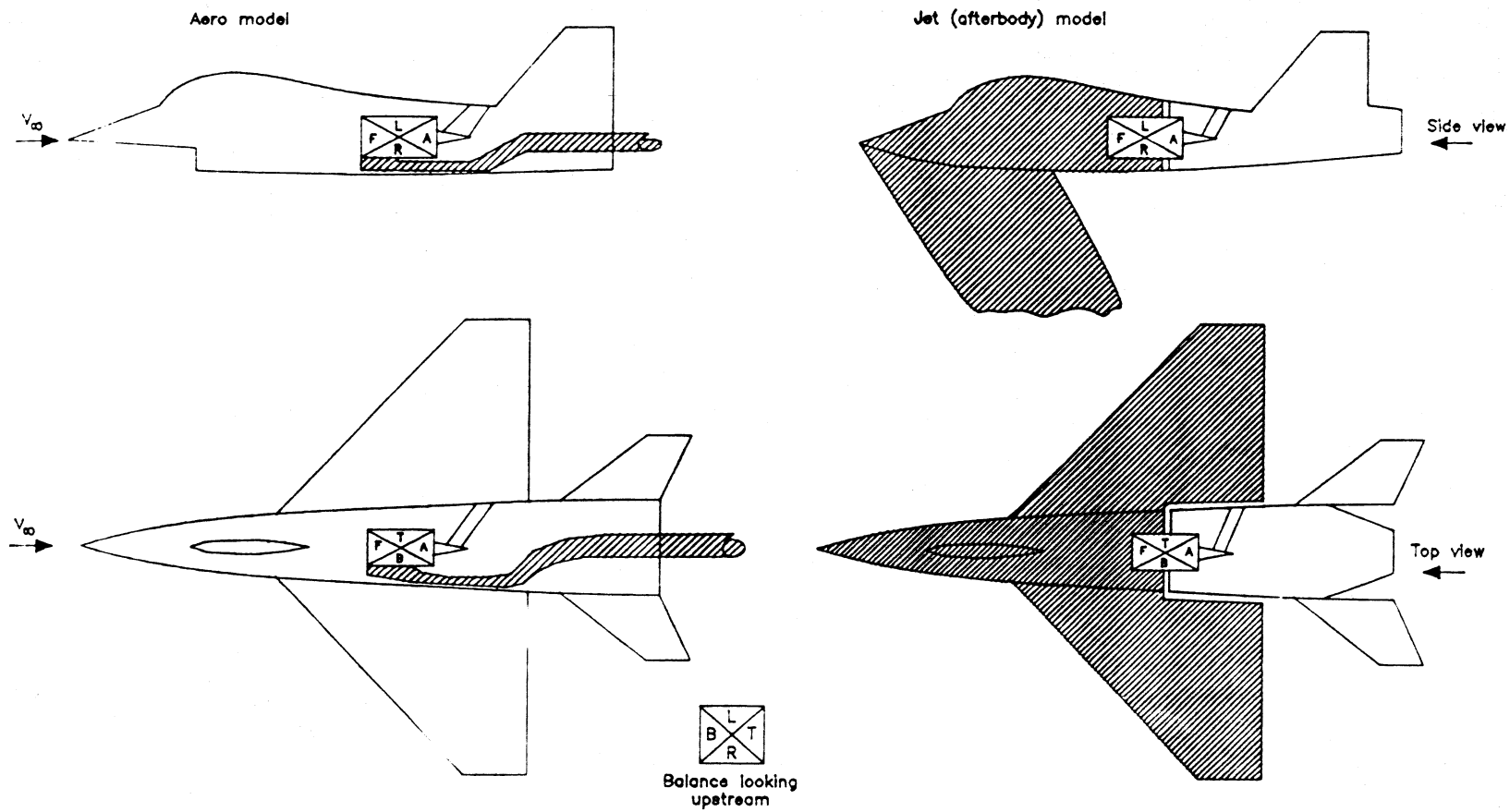

Balance readings

Normal	−
Axial	−
Pitch	−
Side	+
Yaw	+
Roll	−

For positive loads acting on these components

Model forces

Normal	= Side bal
Axial	= −AF bal
Pitch	= Yaw bal
Side	= −NF bal
Yaw	= −PM bal
Roll	= −Roll bal

(d) Case 2A, Same as case 2 held by opposite end.
Figure D−2. Continued.

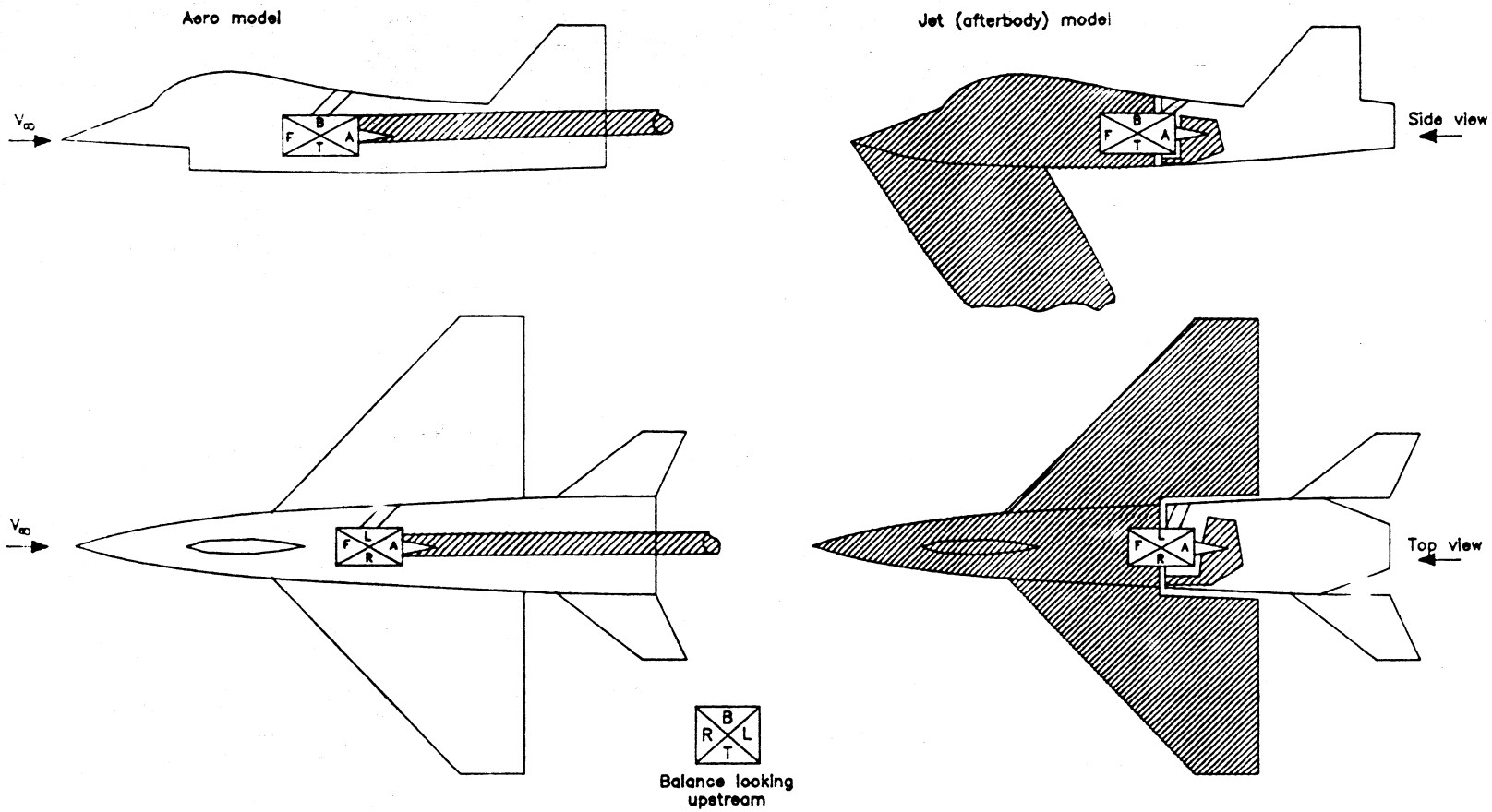

Balance readings	
Normal	−
Axial	+
Pitch	−
Side	−
Yaw	−
Roll	+

Model forces	
Normal	= −NF bal
Axial	= AF bal
Pitch	= −PM bal
Side	= −Side bal
Yaw	= −Yaw bal
Roll	= Roll bal

(e) Case 3, Balance rolled 180° (inverted).
Figure D−2. Continued.

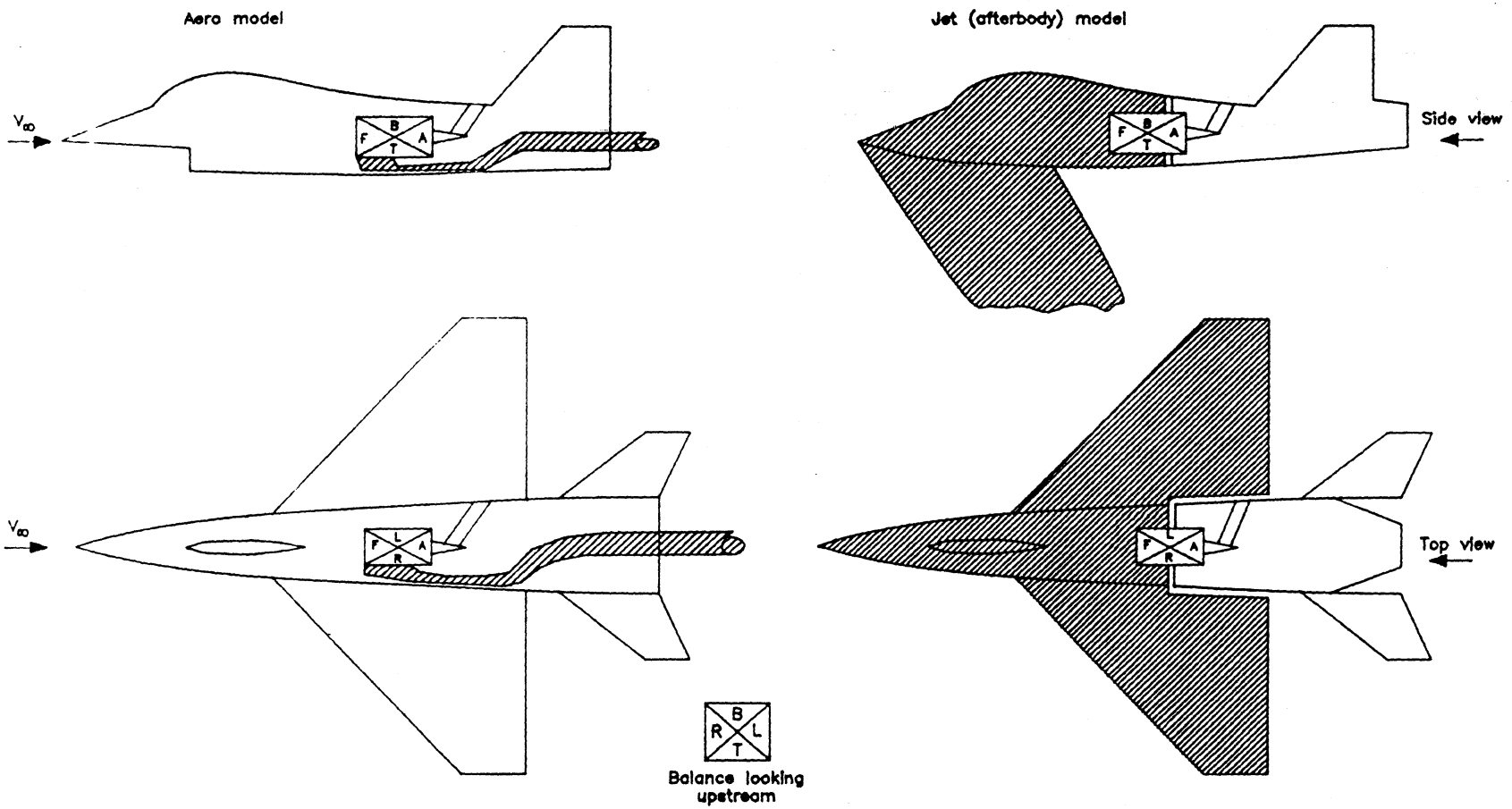

Balance readings	
Normal	+
Axial	−
Pitch	+
Side	+
Yaw	+
Roll	−

Model forces	
Normal	= NF bal
Axial	= −AF bal
Pitch	= PM bal
Side	= Side bal
Yaw	= Yaw bal
Roll	= −Roll bal

(f) Case 3A, Case 3 held by opposite end.
Figure D−2. Continued.

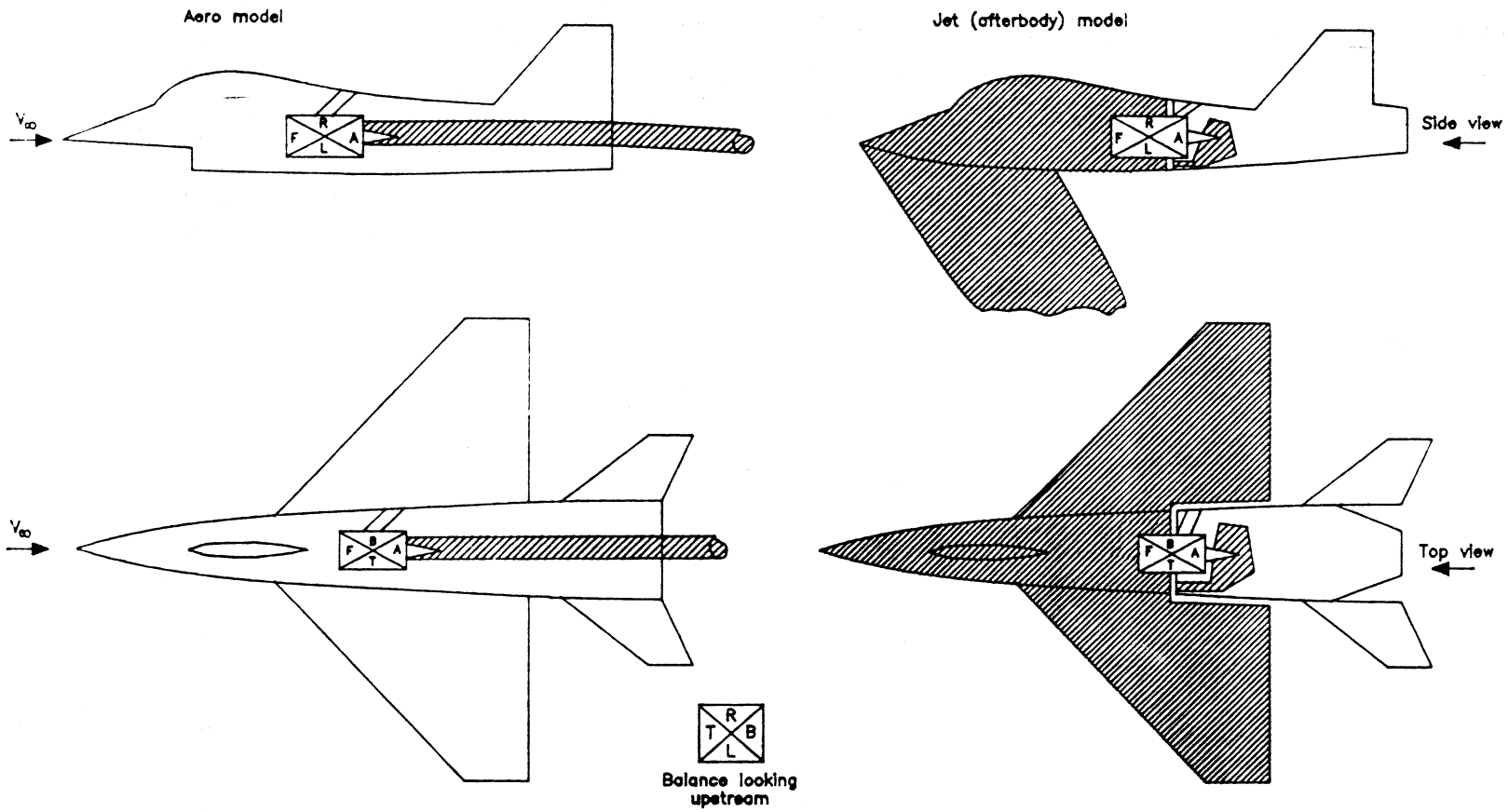

Balance readings

Normal	−
Axial	+
Pitch	−
Side	+
Yaw	+
Roll	+

For positive loads acting on these components

Model forces

Normal	= Side bal
Axial	= AF bal
Pitch	= Yaw bal
Side	= −NF bal
Yaw	= −Pitch bal
Roll	= Roll bal

(g) Case 4, Balance rolled 90° (counterclockwise).
Figure D−2. Continued.

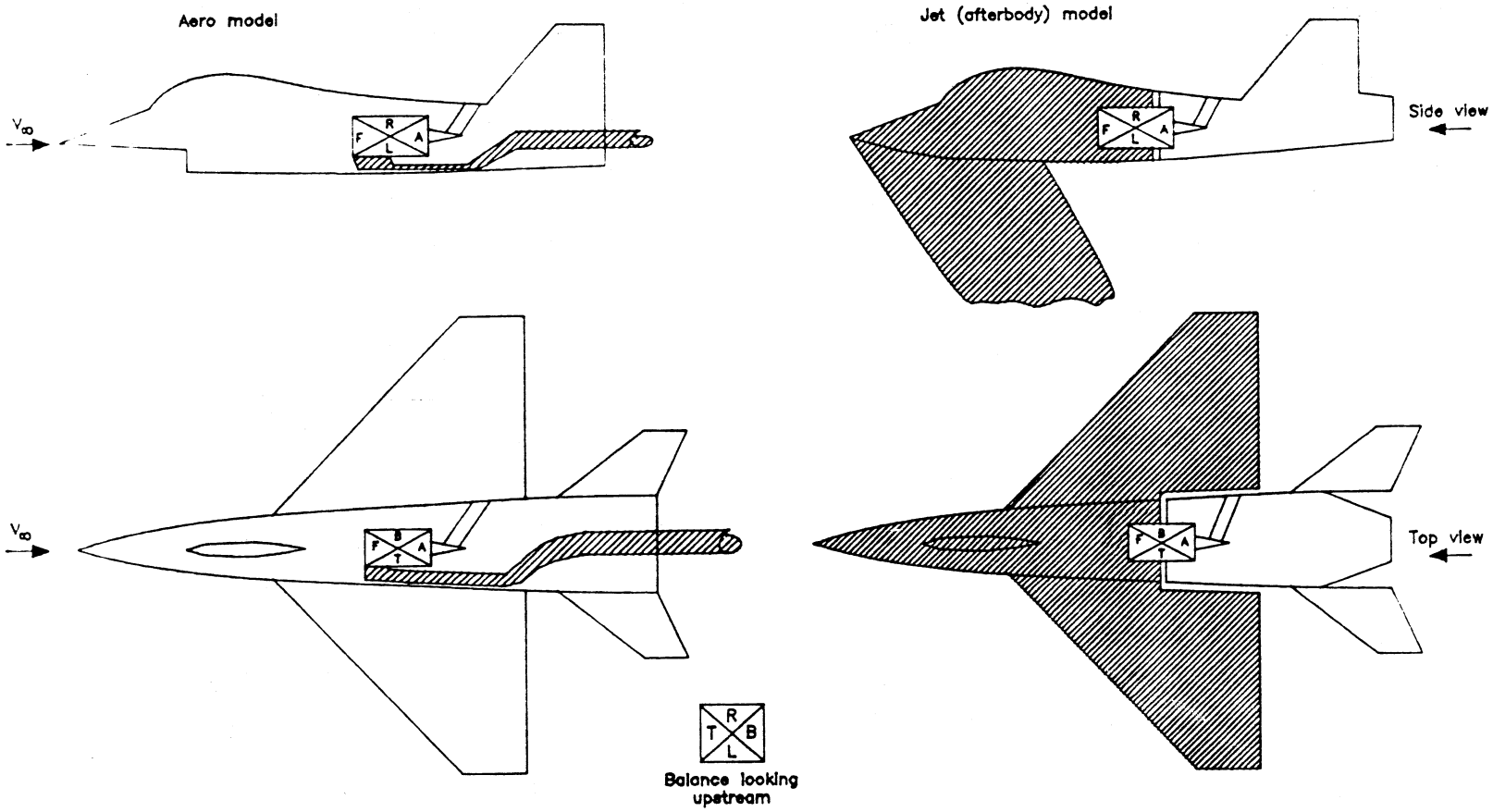

Balance readings

Normal	+
Axial	−
Pitch	+
Side	−
Yaw	−
Roll	−

For positive loads acting on these components

Model forces

Normal	= −Side bal
Axial	= −AF bal
Pitch	= −Yaw bal
Side	= NF bal
Yaw	= PM bal
Roll	= −Roll bal

(h) Case 4A, Case 4 held by opposite end.
Figure D−2. Continued.

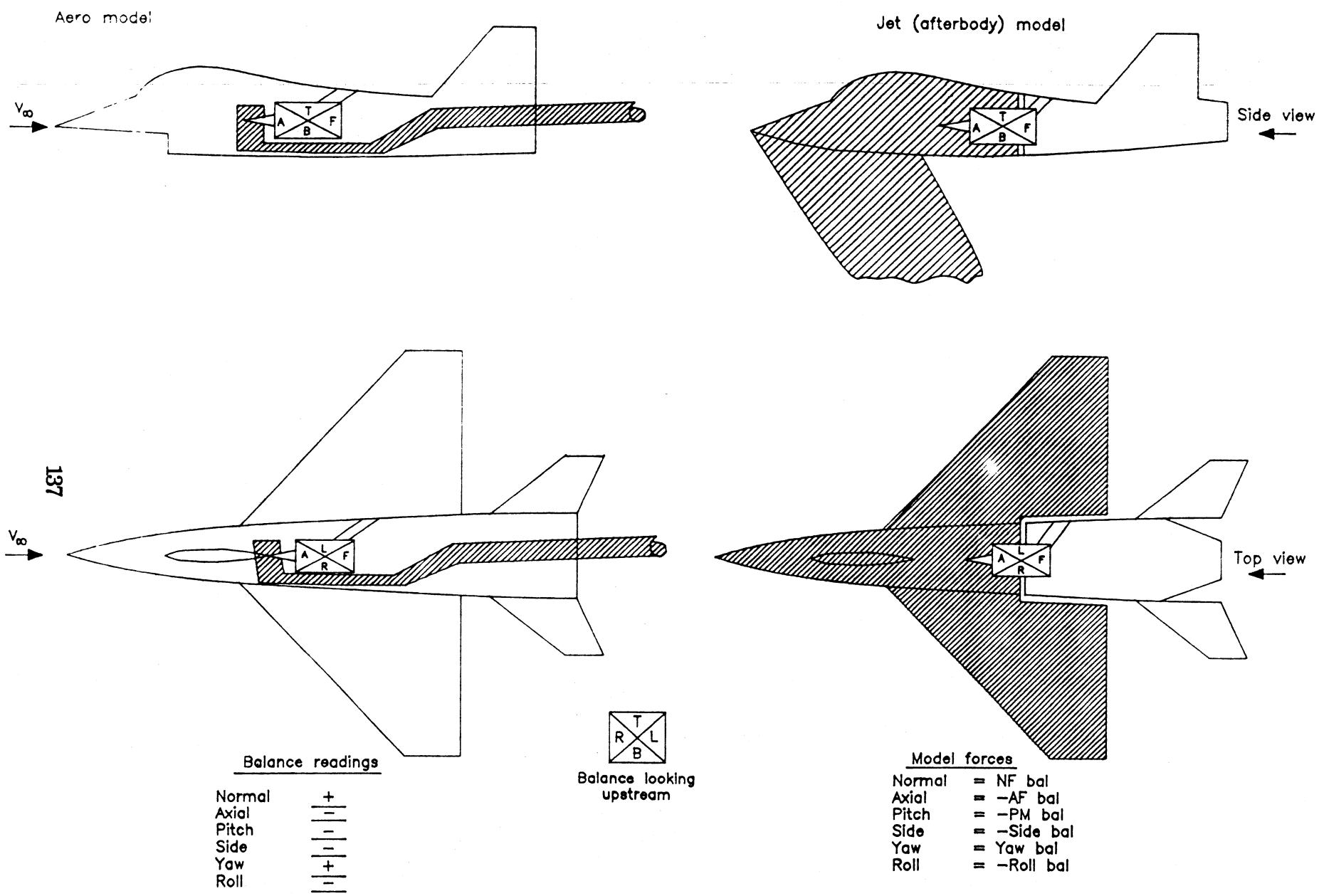

(i) Case 5, Balance yawed 180° or (pitched 180° and rolled 180°) – reversed.
Figure D–2. Continued.

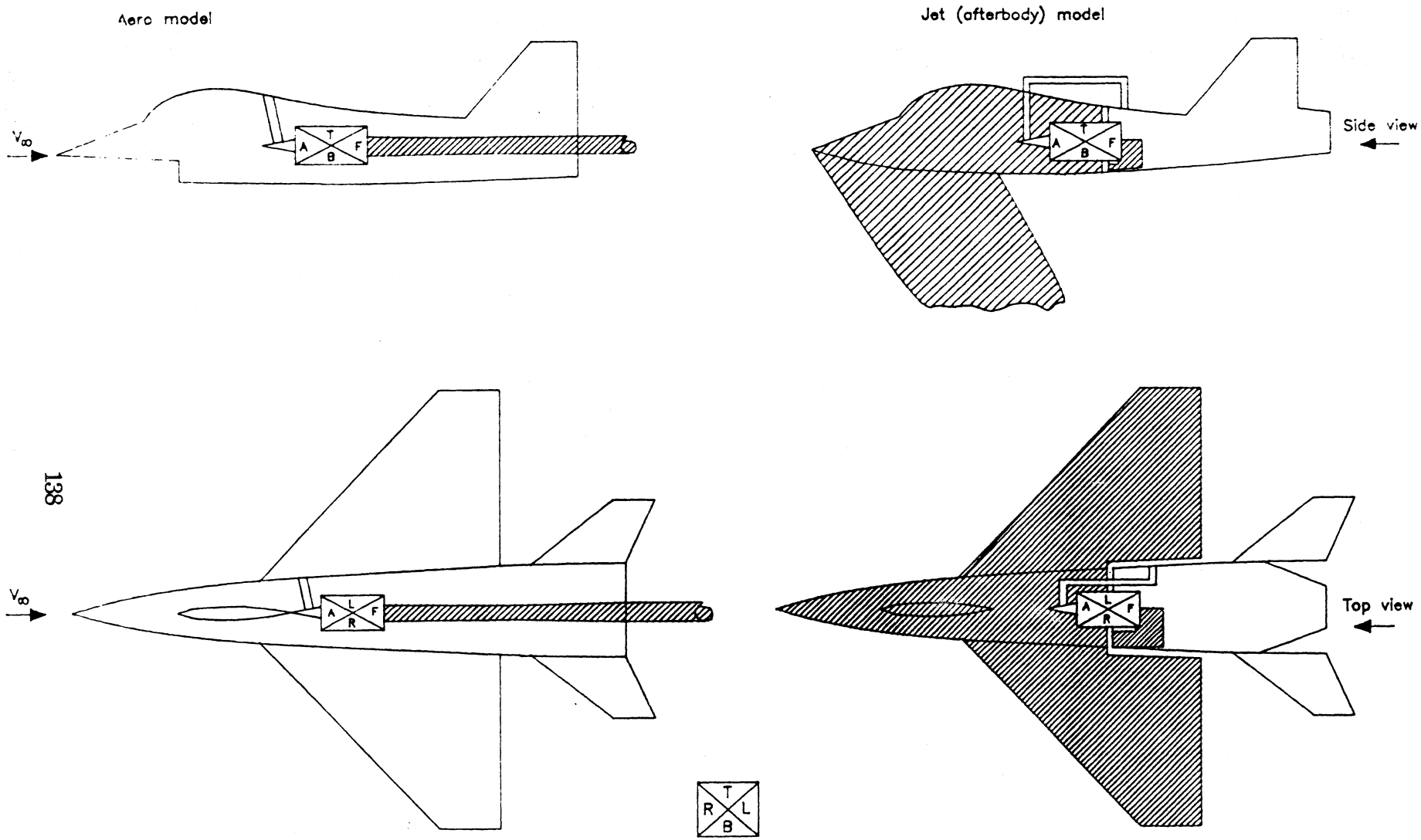

Balance readings

Normal	−
Axial	+
Pitch	+
Side	+
Yaw	−
Roll	+

Model forces

Normal	= −NF bal
Axial	= AF bal
Pitch	= PM bal
Side	= Side bal
Yaw	= −Yaw bal
Roll	= Roll bal

(j) Case 5A, Case 5 held by opposite end.
Figure D−2. Continued.

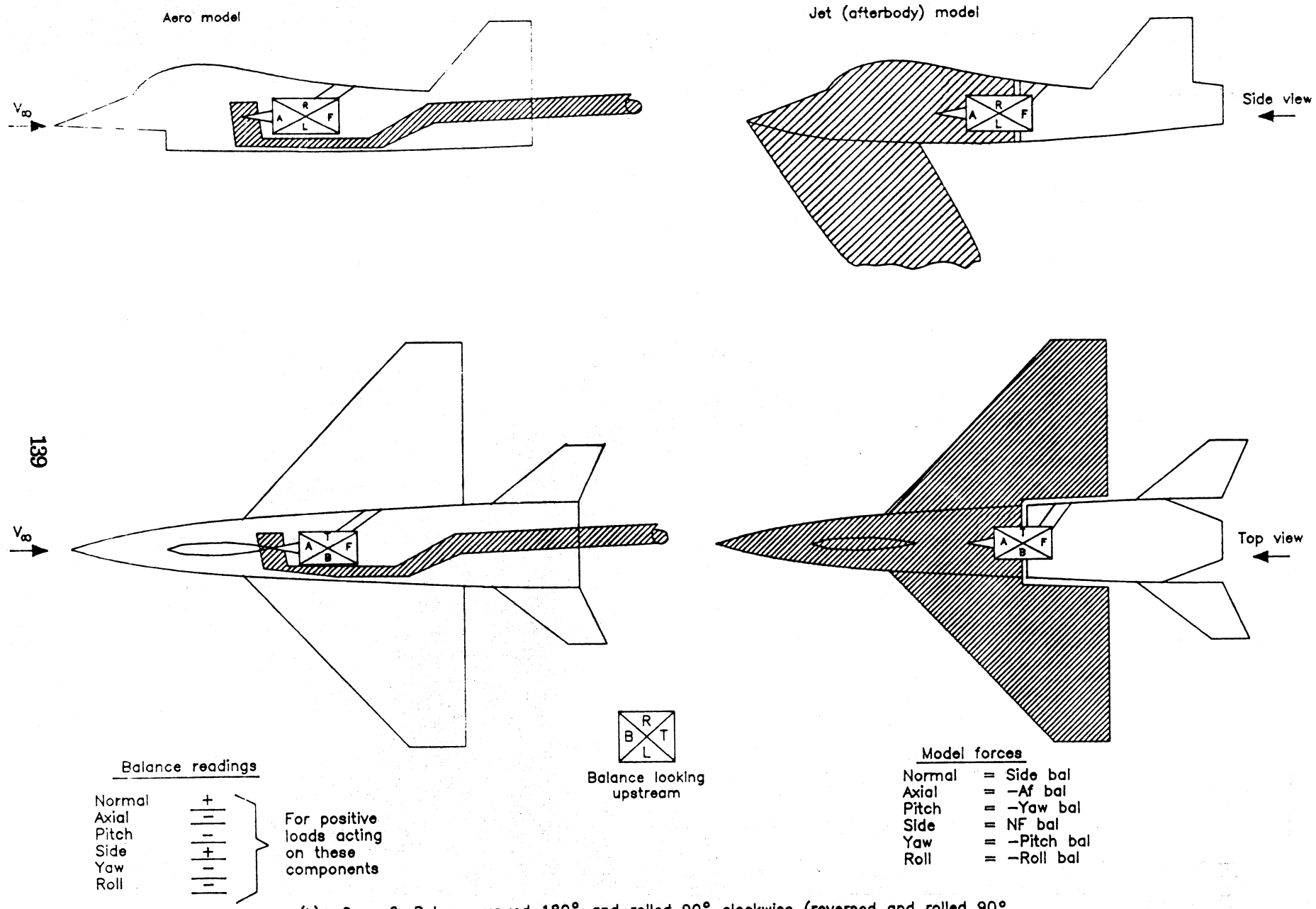

(k) Case 6, Balance yawed 180° and rolled 90° clockwise (reversed and rolled 90° clockwise) or pitched 180° and rolled 90° counterclockwise.

Figure D−2. Continued.

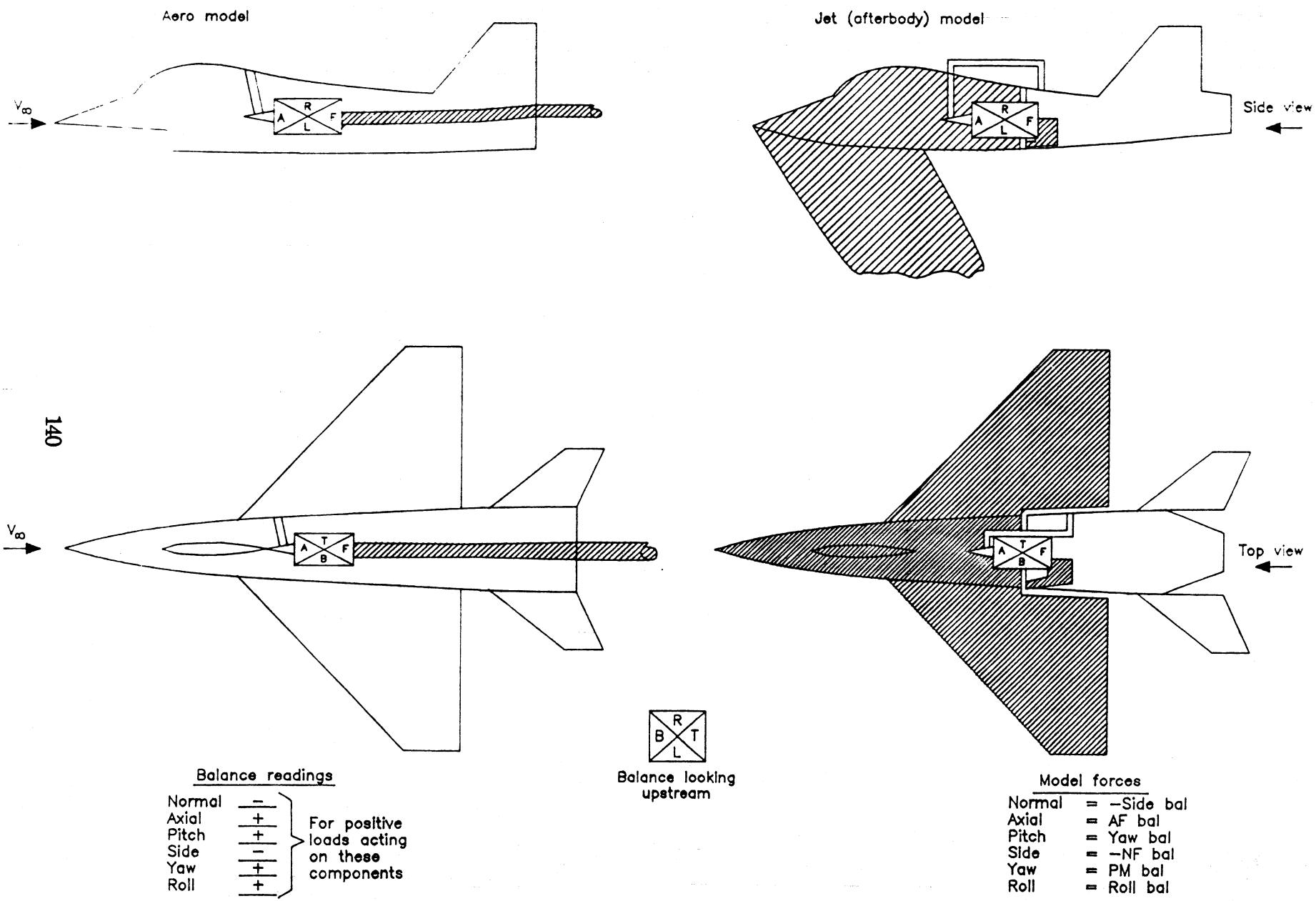

(l) Case 6A, Case 6 held by opposite end.
Figure D−2. Continued.

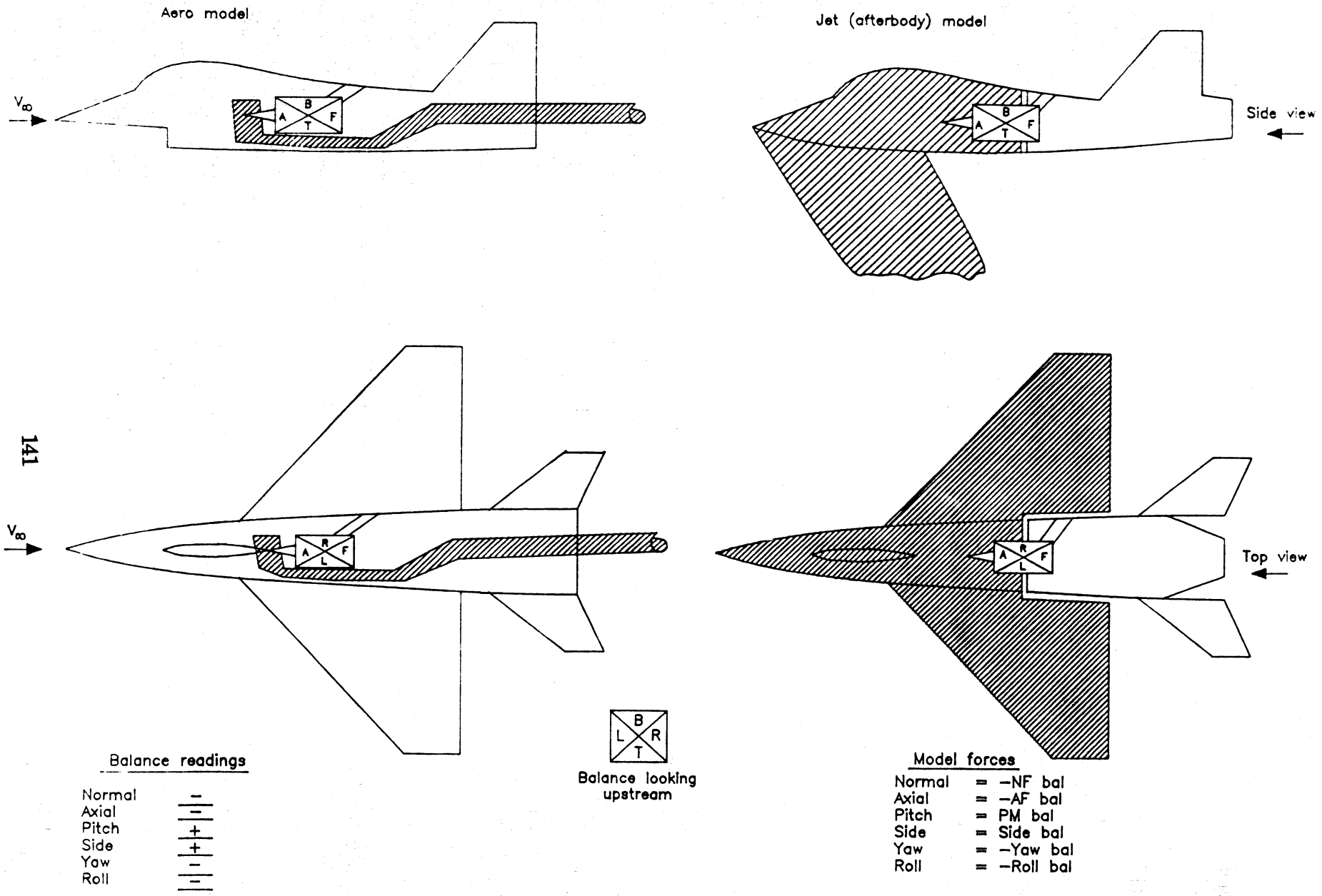

(m) Case 7, Balance yawed 180° and rolled 180° (reversed and inverted) or pitched 180° .

Figure D−2. Continued.

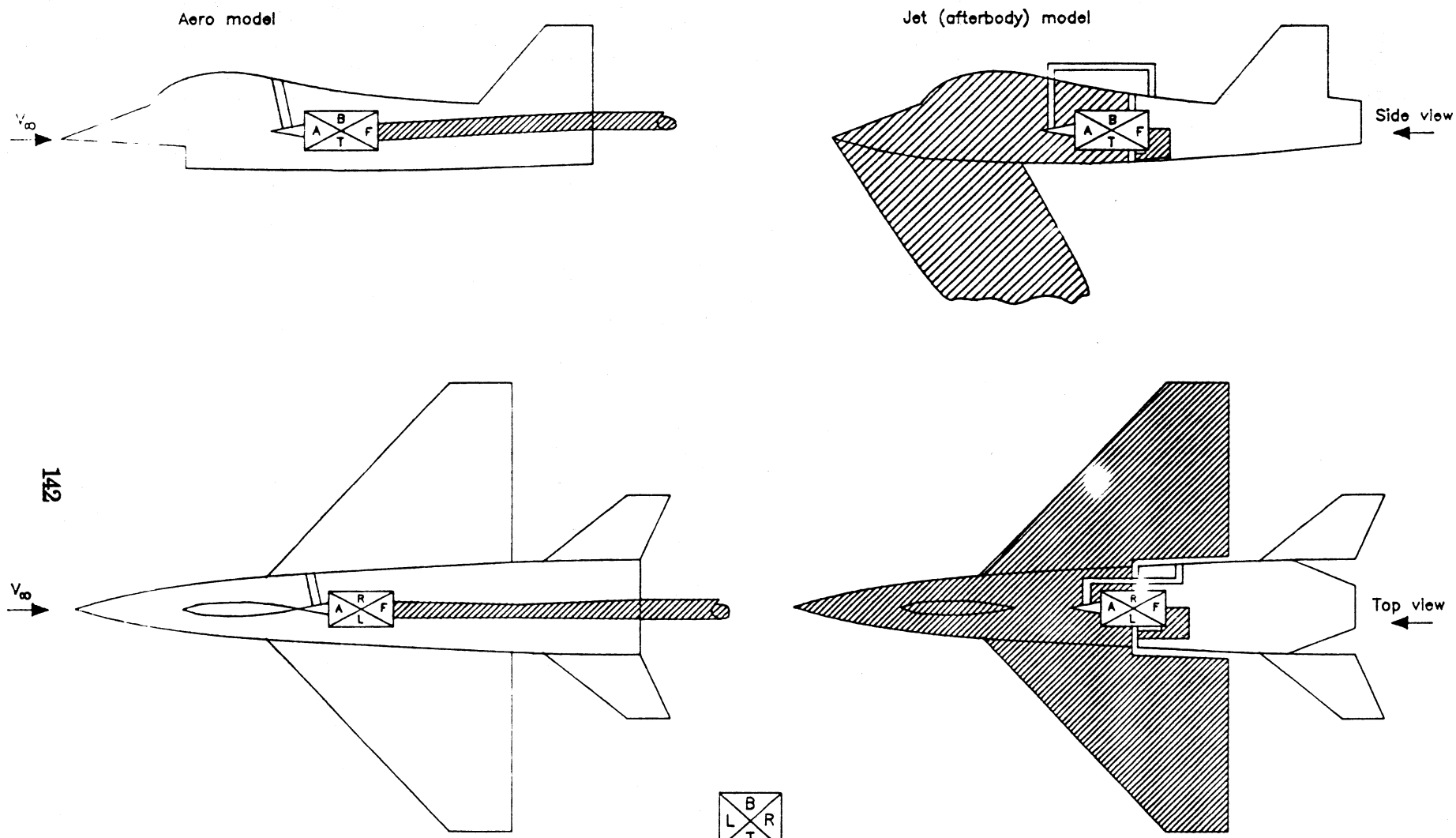

Balance readings

Normal	+
Axial	+
Pitch	−
Side	−
Yaw	+
Roll	+

Balance looking upstream

Model forces

Normal	= NF bal
Axial	= AF bal
Pitch	= −PM bal
Side	= −Side bal
Yaw	= Yaw bal
Roll	= Roll bal

(n) Case 7A, Same as Case 7 held by opposite end.
Figure D−2. Continued.

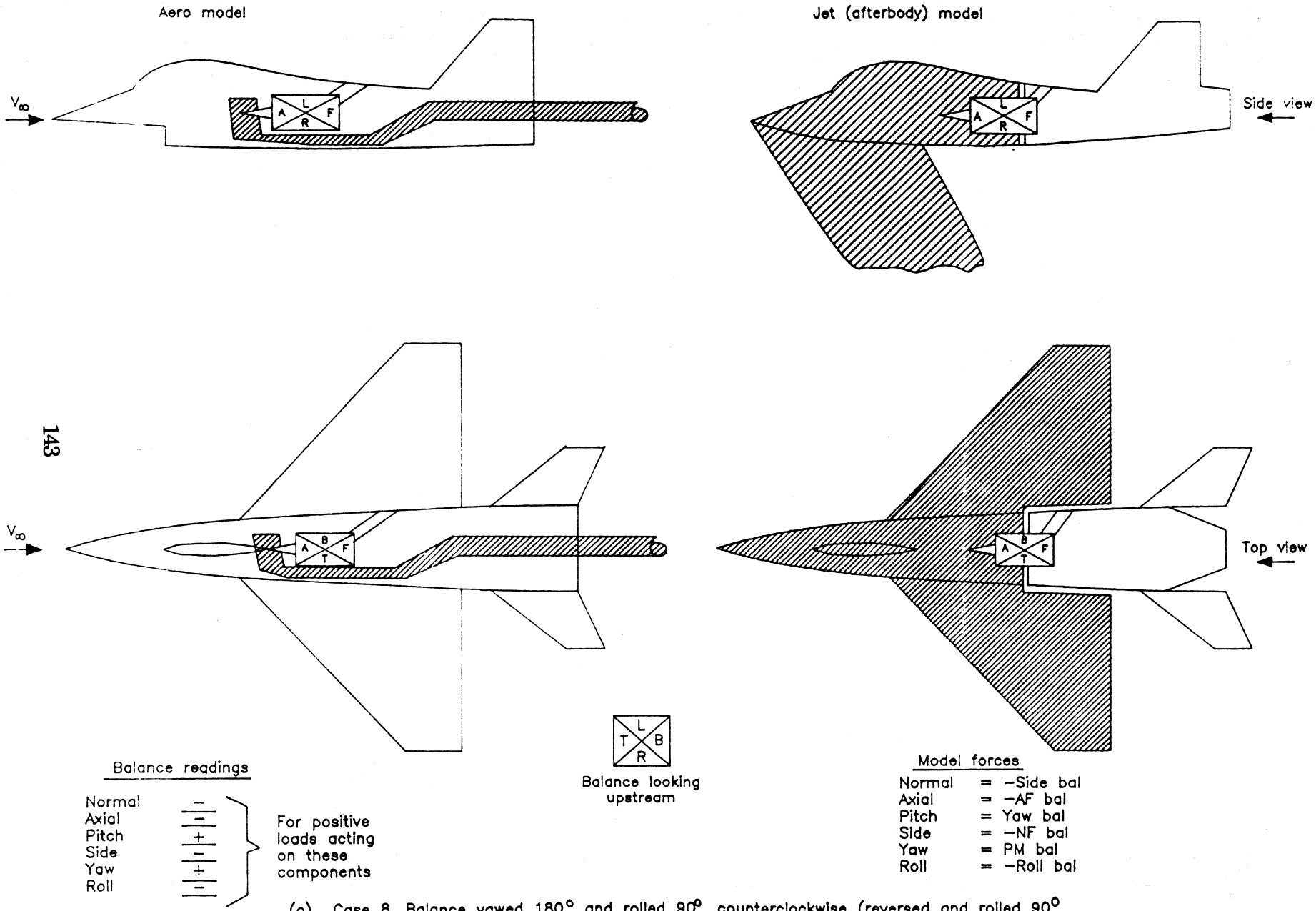

(o) Case 8, Balance yawed 180° and rolled 90° counterclockwise (reversed and rolled 90° counterclockwise) or pitched 180° and rolled 90° clockwise.

Figure D-2. Continued.

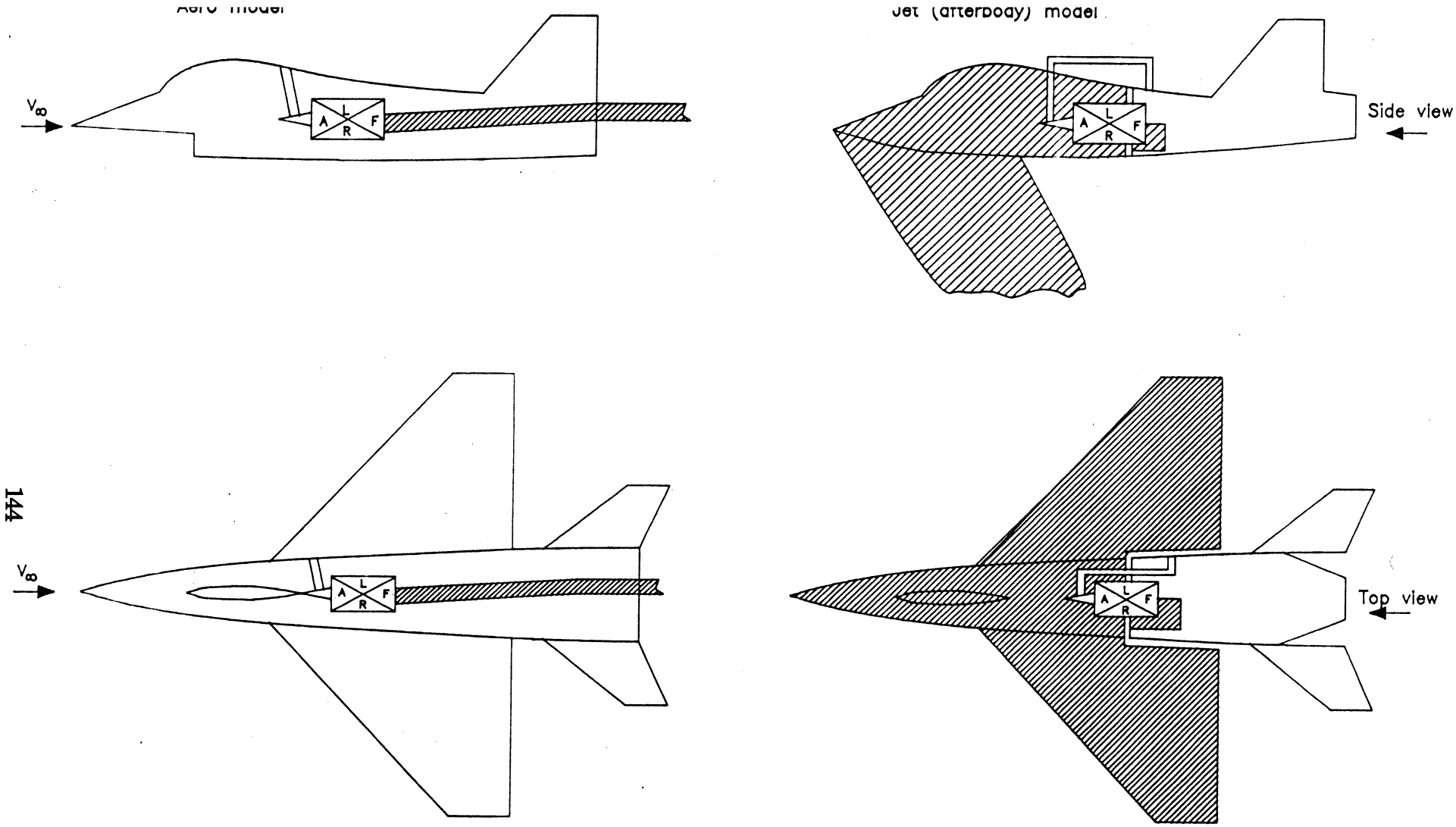

Balance looking upstream

Balance readings

Normal	+	For positive loads acting on these components
Axial	+	
Pitch	−	
Side	+	
Yaw	−	
Roll	+	

Model forces

Normal	= Side bal
Axial	= AF bal
Pitch	= −Yaw bal
Side	=NF bal
Yaw	= −PM bal
Roll	= Roll bal

(p) Case 8A, Case 8 held by opposite end.

Figure D−2 Concluded

The angles described by this sketch are generally referred to as upflow (θu) and sideflow (ψu) angles. These angles are generally so small, that they can be assumed to be in the X–Z and X–Y planes respectively.

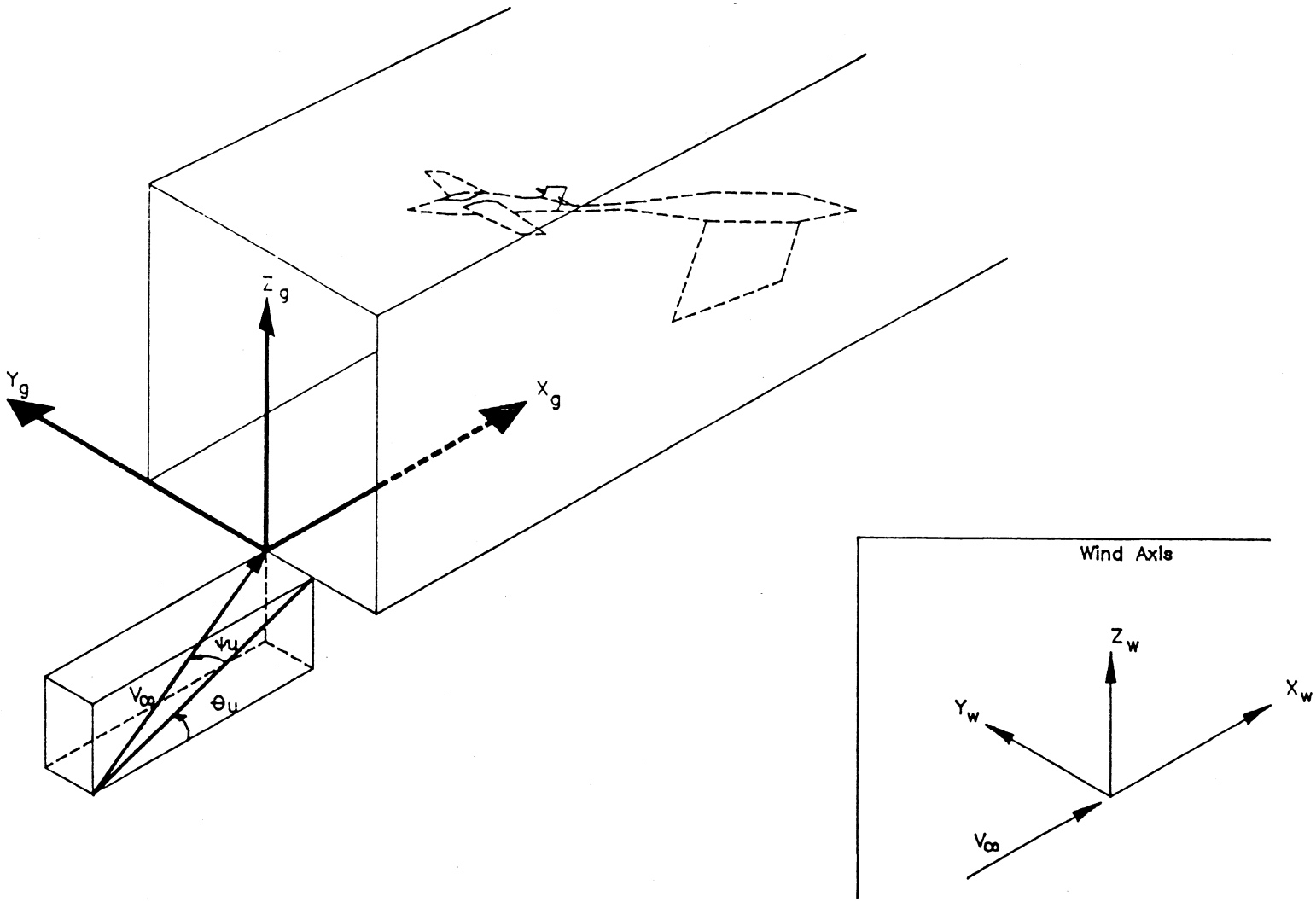

Figure D–3. Definition of gravity and wind axes showing positive directions and rotation angles for wind to gravity transformations.

Note: This figure assumes body axis origin is at balance pitch center.

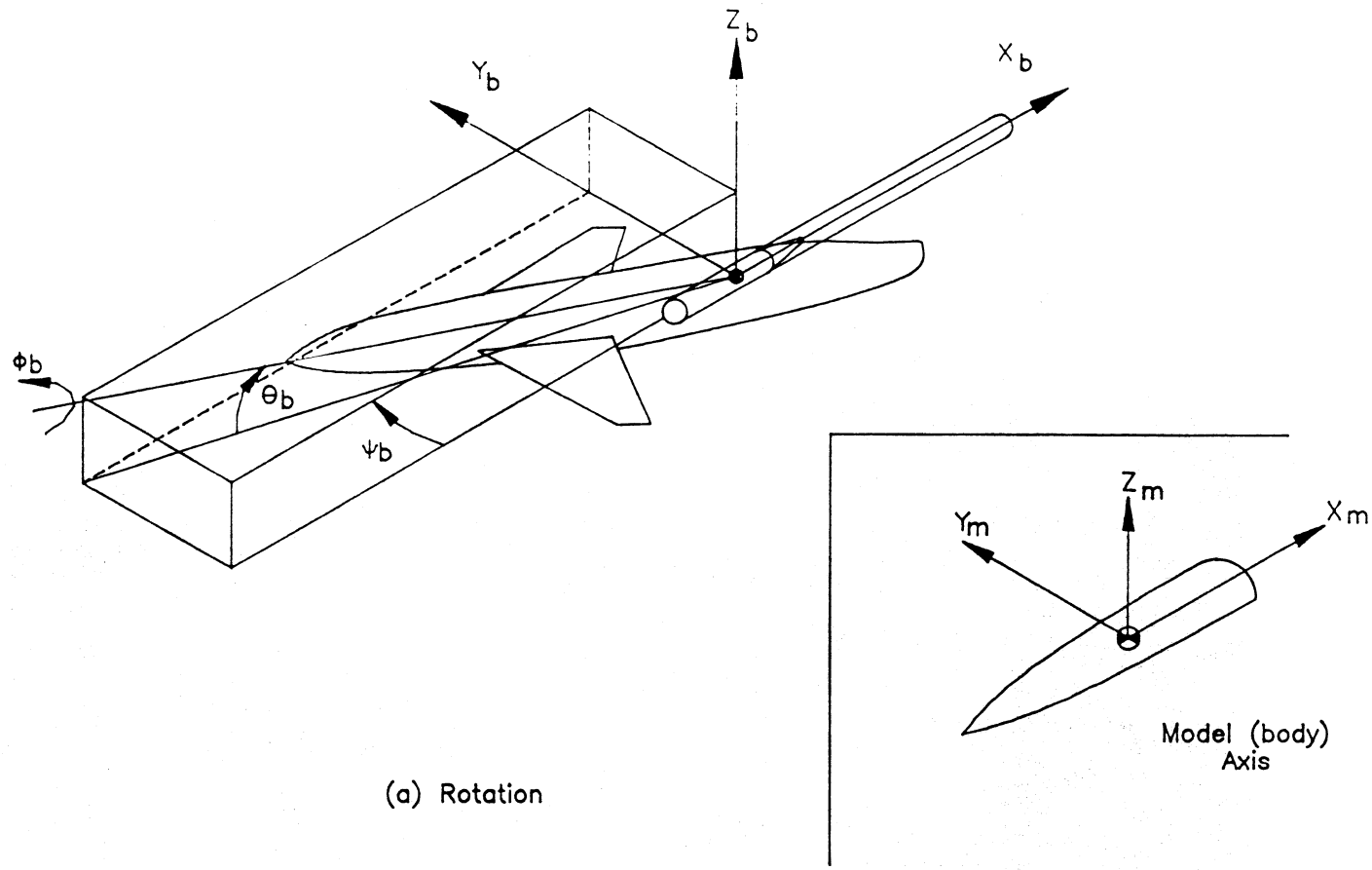

(a) Rotation

Figure D–4. Definition of balance and body axes showing positive directions and rotation angles for balance to model (body) transformations.

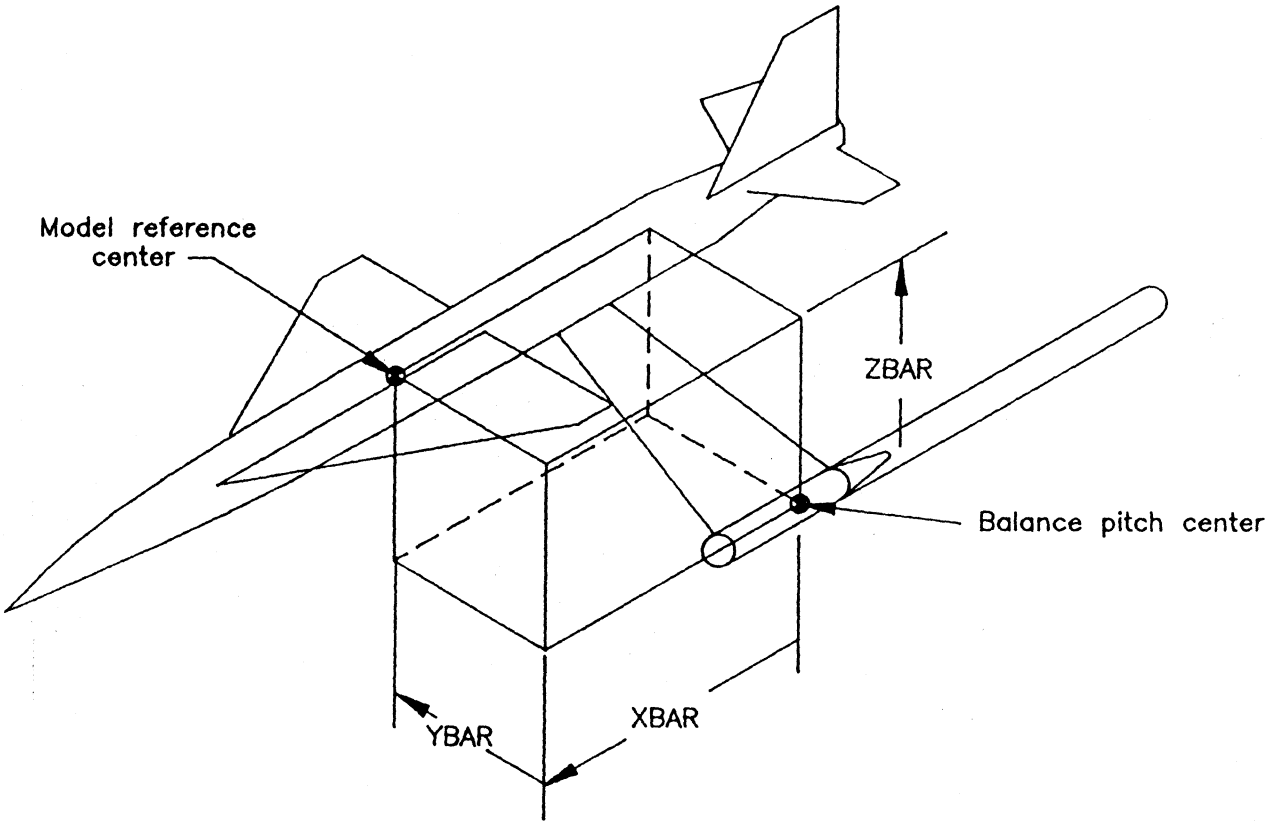

(b) Translation.

Figure D–4. Concluded.

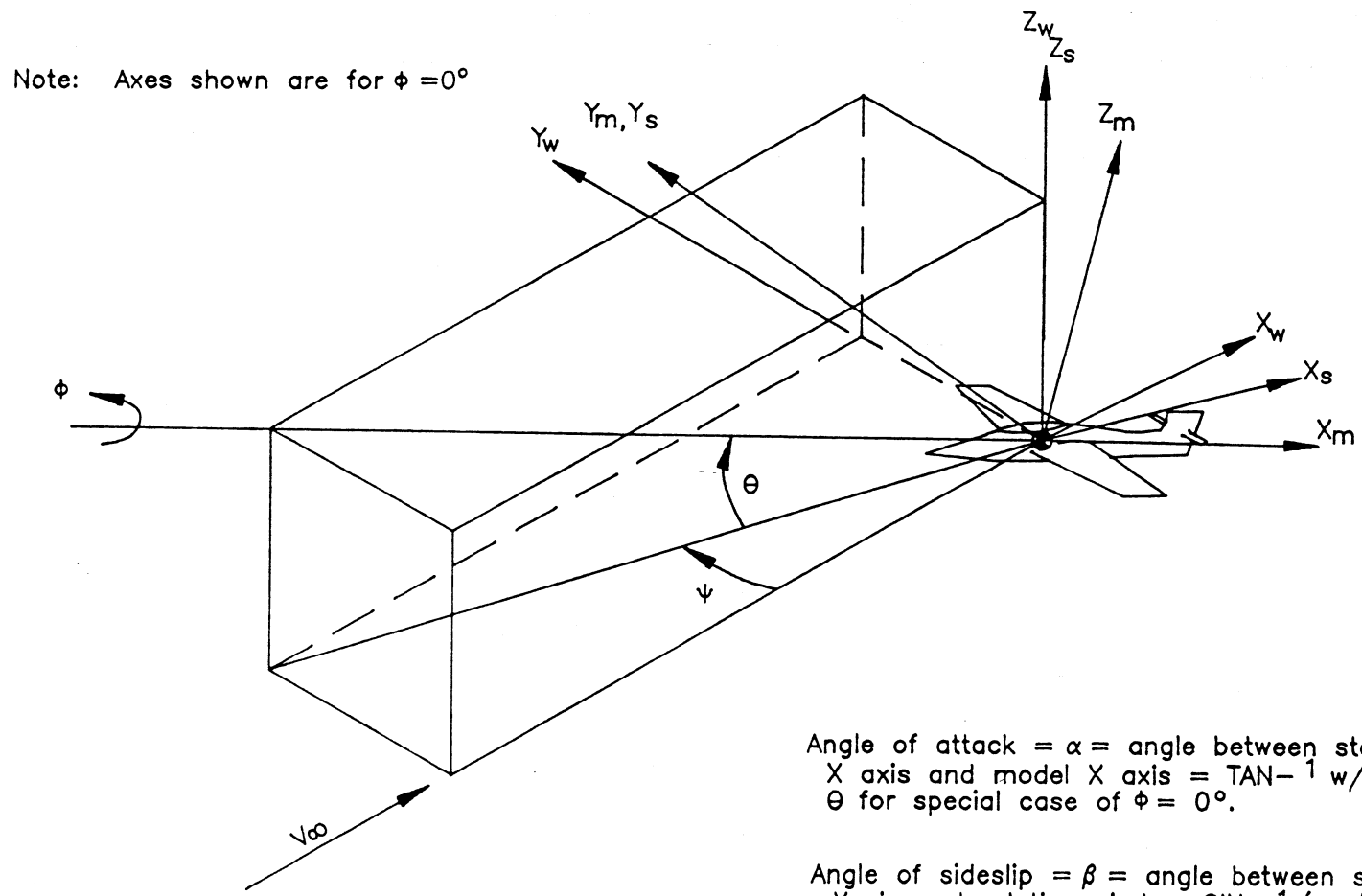

Angle of attack $= \alpha =$ angle between stability X axis and model X axis $= \mathrm{TAN}^{-1}\, w/u = \theta$ for special case of $\phi = 0°$.

Angle of sideslip $= \beta =$ angle between stability Xaxis and relative wind $= \mathrm{SIN}^{-1}(-v/V_\infty) = -\psi$ for special case of $\phi = 0°$.

u = X component of relative wind
v = Y component of relative wind
w = Z component of relative wind

Figure D–5. Definition of angle of attack and angle of sideslip.

APPENDIX E

APPENDIX E

Internal Drag

(or Exit-Flow Distributions)

Figures

MODULE E INTERNAL DRAG (OR EXIT-FLOW DISTRIBUTIONS)

SYMBOL	NOMENCLATURE
AEXIT1	Exit areas for duct 1, sq. in. Not required for IRAKE = 2 or 3.
AEXIT2	Exit areas for duct 2, sq. in. Not required for IRAKE = 2 or 3.
ARAKE(I)	Exit area assigned to each rake total pressure PROBE(I), sq. in. Not required for IRAKE = 2 or 3.
CAI	Total internal axial force coefficient.
CAI1	Internal axial force coefficient for duct 1.
CAI2	Internal axial force coefficient for duct 2.
CDI	Total internal drag coefficient in the wind axis.
CDIS	Total internal drag coefficient in the stability axis.
CLI	Total internal lift coefficient.
CNI	Total internal normal force coefficient.
CYI	Total internal side force coefficient.
FTMDOT1	Mass flow rate at exit of duct 1, slugs/sec.
FTMDOT2	Mass flow rate at exit of duct 2, slugs/sec.
FTPR1	Ratio of nozzle exit total pressure to free stream static pressure for duct 1.
FTPR2	Ratio of nozzle exit total pressure to free stream static pressure for duct 2.
INDX(I,J)	Table of values used to assign rake total pressures to specific static pressures, where 1 = static pressure probes assigned to J = table position. Not required for IRAKE = 2 or 3.
IRAKE	RAKE code. = 0, set CAI=CDIS=CDI=0.0 and skip module 5. = 1, computes internal drag.

SYMBOL	NOMENCLATURE
	= 2, measures exit flow distribution only.
	= 3, obtains internal drag from a given table.
	= 4, obtains internal drag from a row of internal static pressures.
	= 5, inlet distortion with rotating rake.
	= 6, inlet distortion with nonrotating rake.
KPR(I)	Needed to correct for bad rake static pressure probes, where I = static pressure probe. Not required for IRAKE = 2 or 3. If no correction is to be made to the pressure probe, then its value is set to 1.0. If the probe is faulty or does not exist, then its value is set to 0.0.
MEXIT1	Average exit mach number for duct 1.
MEXIT2	Average exit mach number for duct 2.
MODOT1	Mass flow rate based on free-stream conditions for duct 1, slugs/sec.
MODOT2	Mass flow rate based on free-stream conditions for duct 2, slugs/sec.
M/M01	Mass flow ratio for duct 1.
M/M02	Mass flow ratio for duct 2.
NPR1	Number of static pressure probes on the rake for duct 1. Maximum of 10. Not required for IRAKE = 3.
NPR2	Number of static pressure probes on the rake for duct 2. Maximum of 10-NPR1. Not required for IRAKE = 3.
NPTR1	Number of total pressure probes on the rake for duct 1. Maximum of 50. Not required for IRAKE = 3.

SYMBOL	NOMENCLATURE
NPTR2	Number of total pressure probes on the rake for duct 2. Maximum of 50-NPTR1. Not required for IRAKE = 3.
PD1/PTO	Ratio of the average duct static pressure to free-stream total pressure for duct 1.
PD2/PTO	Ratio of the average duct static pressure to free-stream total pressure for duct 2.
PRAKE(I)	Rake static pressure, where I = probe number.
PR/PTO(I)	Ratio of rake static pressure to free-stream total pressure, where I = probe number.
PSIN1	Thrust axis yaw angle (degrees) for duct 1. Not required for IRAKE = 2 or 3.
PSIN2	Thrust axis yaw angle (degrees) for duct 2. Not required for IRAKE = 2 or 3.
PTD1/PTO	Ratio of the average duct total pressure to free-stream total pressure for duct 1.
PTD2/PTO	Ratio of the average duct total pressure to free-stream total pressure for duct 2.
PTRAKE(I)	Rake total pressure, where I = probe number.
PTR/PTO(I)	Ratio of rake total pressure to free-stream total pressure, where I = probe number.
RHOE	Free-stream density.
SCAP1	Inlet capture area for duct 1, sq. in. Not required for IRAKE = 2 or 3.
SCAP2	Inlet capture area for duct 2, sq. in. Not required for IRAKE = 2 or 3.

SYMBOL	NOMENCLATURE
THETAN1	Thrust axis Euler pitch angle (degrees), with respect to body axis for duct 1. Not required for IRAKE = 2 or 3.
THETAN2	Thrust axis Euler pitch angle (degrees), with respect to body axis for duct 2. Not required for IRAKE = 2 or 3.

APPENDIX E

Module E

Internal Drag (or Exit Flow Distributions)

A. Required Constants

The constants for internal drag calculations are given in the nomenclatures. All constants are initialized to a value of 0.0.

1. IRAKE - Rake code

   where

   IRAKE = 0, Set CAI = CDIS = CDI = 0.0 and skip this module.

   IRAKE = 1, compute internal drag.

   IRAKE = 2, measure exit flow distribution only.

   IRAKE = 3, obtain internal drag from a given table.

   IRAKE = 4, obtain internal drag from a row of internal static pressures.

   IRAKE = 5, inlet distortion with rotating rake

   IRAKE = 6, inlet distortion with nonrotating rake

$$\sum_{I=1}^{NPTR1} ARAKE(I) = \text{total exit area for duct 1} \qquad \text{(Eq. E-1)}$$

$$\sum_{I=NPTR1+1}^{NPTR2} ARAKE(I) = \text{total exit area for duct 2} \qquad \text{(Eq. E-2)}$$

2. SCAP1, SCAP2 - inlet capture area, where SCAP1 is for duct 1 and SCAP2 is for duct 2. Not required for IRAKE = 2 or 3.

3. AEXIT1, AEXIT2 - exit areas for ducts 1 and 2, respectively. Not required for IRAKE = 2 or 3.

4. PSIN1, PSIN2 - Thrust axis yaw angle, with respect to body axis, for ducts 1 and 2, respectively. Positive direction is shown on Figure E-1. Not required for IRAKE = 2 or 3.

5. THETAN1, THETAN2 - Thrust axis Euler pitch angles, with respect to body axis, for ducts 1 and 2, respectively, deg. Positive direction is shown on Figure E-1. Figure E-1 also gives relations to obtain the Euler angle if not known directly. Not required for IRAKE = 2 or 3.

6. AREF - Model reference area used for coefficients, sq. in. If Module B or C is used, this constant is already specified. Not required for IRAKE = 2 or 3.

B. Test for Module E Computations

IF IRAKE = 0, skip module E.

IF IRAKE = 3, do section T only.

IF IRAKE = 4, do section U only.

IF IRAKE = 5 or 6, do Module I

C. Rake Total Pressure

1. Rake total pressures are called PTRAKE(I). Note that provisions are made to survey two exits at one time; however probes are numbered consecutively (max. of 50). For example, probes in the first exit may be numbered 1

through 30; probes in the second exit must start with number 31. Where I = probe number.

2. The ratio of rake total pressure to free-stream total pressure is called PTR/PTO(I), where PTO is from module A.

3. The constants required from the project engineer are NPTR1, and NPTR2.

Calculate PTR/PTO(I) for I = 1, NPTR1 + NPTR2

$$PTR / PTO(I) = \frac{PTRAKE(I)}{PTO}$$

(Eq. E-3)

D. Rake Static Pressures

1. Rake static pressures are called PRAKE(I). Comments C.1. above apply except that the maximum number of probes is 10.

2. The ratio of rake static pressure to free-stream total pressure is called PR/PTO(I). PTO is from module A.

3. The constants required from the project engineer are NPR1, and NPR2.

If NPR1 = 0, skip this part.

Calculate PR/PTO(I) for I = 1, NPR1 + NPR2

$$PR / PTO(I) = \frac{PTRAKE(I)}{PTO}$$

(Eq. E-4)

E. <u>Rake Total Pressure/Static Pressure Assignments</u>

1. If internal drag is to be computed, the project engineer must assign specific total pressure measurement to each static pressure measurement.

INDX(I,J) This is the index of the total rake pressure PTRAKE that goes with the static rake pressure, PRAKE. The array INDEX has two indices, I,J. The value of INDEX(I,J) contains the index of the total pressure that goes with the Ith static pressure. The value of J starts at one (1) and increments by 1 until the value of INDEX(I,J) is zero or if other values of I or J exceed limits.

Example: To assign PRAKE3 to PTRAKE24

INDEX(3,J) = 24 where J is table position starting at 1.

2. For example:

J = 1	I = 1, 2, 3, 4
J = 2	I = 5, 9, 11
J = 3	I = 6, 7, 8, 10
.	.
.	.
.	.
J = NPR1 + NPR2	I(Max) = NPTR1 + NPTR2

3. The constants required from the project engineer are from the I, J table.

If IRAKE = 2, skip this section.

F. Duct Flow Static-to-Total-Pressure Ratio

1. The ratio of duct flow static pressure to duct flow total pressure is called PR/PTR(J,I), where J and I are the combinations supplied in section E above. For the example shown in E., values of PR/PTR(J,1) are obtained for:

   PR/PTR1,1
   PR/PTR1,2
   PR/PTR1,3
   PR/PTR1,4
   PR/PTR2,5
   PR/PTR2,9
   PR/PTR2,11
   PR/PTR3,6
   PR/PTR3,7
   etc.

If IRAKE = 2, skip this section.

Do the following calculation for J = 1, NPR1 + NPR2

Do the following calculation for I = those values assigned

$$PR/PTR(J,I) = \frac{PR/PTO(J)}{PTR/PTO(I)}$$

(Eq. E-5)

G. Correct for Supersonic Duct Mach Numbers

1. Local duct Mach number is called MD(I). Where I = total pressure probe number on which local Mach number is based.

If IRAKE = 2, skip this section.

Do the following calculation for J = 1, NPR1 + NPR2

Do the following calculation for I = those values assigned

If PR/PTR(J,I) < 0.5283, calculate MD(I) using the Newton Raphson method with an initial assumption of MD(I) = 1.0001 and correct the total pressure ratio for normal shock.

$$MD(I) = \sqrt{\frac{5}{6} * \left[\frac{7MD(I)^2 - 1}{6}\right]^{5/7} * \left[\frac{PTR/PTO(I)}{PR/PTO(J)}\right]^{2/7}}$$

(Eq. E-6)

$$PTR/PTO(I) = PR/PTO(J) * \left(1 + \frac{MD(I)^2}{5}\right)^{7/2}$$

(Eq. E-7)

H. <u>Compute Subsonic Duct Mach Numbers</u>

1. This calculation is made for those I, J combinations for which PR/PTR (J, I) > 0.5283.

If IRAKE = 2, skip this section.

Do the following calculation for J = 1, NPR1 + NPR2
Do the following calculation for I = those values assigned

If PR/PTR(J,I) > 0.5283, calculate MD(I)

$$MD(I) = \sqrt{5 * \left[\frac{PTR/PTO(I)}{PR/PTO(J)}\right]^{2/7} - 5}$$

(Eq. E-8)

I. <u>Compute Average Duct Pressure Ratios</u>

1. The ratio of the average duct total pressure to free-stream total pressure is called PTD1/PTO for duct 1 and PTD2/PTO for duct 2.

2. The ratio of the average duct static pressure to free-stream total pressure is called PD1/PTO for duct 1 and PD2/PTO for duct 2.

3. The constants required from the project engineer are ARAKE(I), KPR(I), NPTR1, NPTR2, NPR1, and NPR2

$$PTD1/PTO = \frac{\sum_{I=1}^{NPTR1} ARAKE(I)[PTR/PTO(I)]}{\sum_{I=1}^{NPTR1} ARAKE(I)}$$

$$\text{If } \sum_{I=1}^{NPTR1} ARAKE(I) = 0.0, \text{ then } PD1/PTO = 1.0$$

(Eq. E-9)

$$PD1/PTO = \frac{\sum_{I=1}^{NPR1} KPR(I)[PR/PTO(I)]}{\sum_{I=1}^{NPR1} KPR(I)}$$

(Eq. E-10)

$$\text{If } \sum_{I=1}^{NPTR1} KPR(I) = 0.0, \text{ then } PD1/PTO = 1.0$$

If NPTR2 = 0.0, skip equations E-11 and E-12.

$$PTD2/PTO = \frac{\sum_{I=NPTR1+1}^{NPTR2} ARAKE(I)[PTR/PTO(I)]}{\sum_{I=NPTR1+1}^{NPR2} ARAKE(I)}$$

(Eq. E-11)

$$\text{If} \sum_{I=NPTR1+1}^{NPTR2} ARAKE(I) = 0.0, \text{ then } PD2/PTO = 1.0$$

$$PD2/PTO = \frac{\sum_{I=NPR1+1}^{NPR2} KPR(I)[PR/PTO(I)]}{\sum_{I=NPR1+1}^{NPR2} KPR(I)}$$

(Eq. E-12)

$$\text{If} \sum_{I=NPR1+1}^{NPR2} KPR(I) = 0, \text{ then } PD2/PTO = 1.0$$

J. <u>Mass-Flow Rates</u>

1. Mass-flow rate at the duct exit is called FTMDOT1 for duct 1 and FTMDOT2 for duct 2.

2. Mass-flow rate based on free-stream conditions is called MODOT1 for duct 1 and MODOT2 for duct 2.

3. TTO, MACH, and PO come from the tunnel parameters, module A.

4. The constants required from the project engineer are ARAKE(I), SCAP1, SCAP2, NPTR1, and NPTR2.

   If IRAKE = 2, skip equations E-13, E-14, E-15 and E-16.

$$FTMDOT1 = \frac{0.028563}{\sqrt{TTO + 459.67}} * \sum_{I=1}^{NPTR1} ARAKE(I) * PRAKE(J) * \left[\frac{PTR/PTO(I)}{PR/PTO(J)}\right]^{1/7} * MD(I)$$

(Eq. E-13)

where J corresponds to I from E.1. above.

$$MODOT1 = \frac{(0.028563) * (SCAP1) * (MACH) * (PO)}{\sqrt{TTO + 459.67}} * \left[1 + 0.2(MACH)^2\right]^{1/2}$$

(Eq. E-14)

If NPTR2 = 0, skip equations E-15 and E-16.

$$FTMODOT2 = \frac{(0.028563)}{\sqrt{TTO + 459.67}} * \sum_{I=NPTR1+1}^{NPTR2} ARAKE(I) * PRAKE(J) * \left[\frac{PTR / PTO(I)}{PR / PTO(J)}\right]^{1/7} * MD(I)$$

(Eq. E-15)

where J corresponds to I from E.1. above.

$$MODOT2 = \frac{(0.028563) * (SCAP2) * (MACH) * (PO)}{\sqrt{TTO + 459.67}} * \left[1 + 0.2(MACH)^2\right]^{1/2}$$

(Eq. E-16)

K. <u>Mass-Flow Ratio</u>

1. Mass-flow ratio for duct 1 is called M/M01. Mass-flow ratio for duct 2 is called M/M02.

If IRAKE = 2, skip the remainder of this section.

$$M / MO1 = \frac{FTMDOT1}{MODOT1}$$

(Eq. E-17)

If MODOT1 = 0.0, M/M01 = 0.0

If NPTR2 = 0, skip equation E-18.

$$M/MO2 = \frac{FTMDOT2}{MODOT2}$$

(Eq. E-18)

L. <u>Free-Stream Velocity</u>

1. Free-stream velocity is called VO.

2. TTO and MACH are from module A.

$$VO = \frac{49.021179\sqrt{TTO + 459.67}}{\sqrt{1 + 0.2(MACH)^2}}$$

(Eq. E-19)

M. <u>Average Exit Mach Number</u>

1. The average exit Mach number for duct 1 is always called MEXIT1. The average exit Mach number for duct 2 is always called MEXIT2.

If IRAKE = 2, skip the remainder of this section.

$$MEXIT1 = \sqrt{5 * \left[\frac{PTD1/PTO}{PD1/PTO}\right]^{2/7} - 5}$$

(Eq. E-20)

If NPTR2 = 0, skip equation E-21.

$$MEXIT2 = \sqrt{5 * \left[\frac{PTD2/PTO}{PD2/PTO}\right]^{2/7} - 5}$$

(Eq. E-21)

N. Internal Axial Force

1. The internal axial force is called AI1 and AI2 for ducts 1 and 2, respectively.

2. The internal axial force coefficient is called CAI1 and CAI2 for ducts 1 and 2, respectively.

3. The total internal axial force coefficient is called CAI.

4. PTO, PO, and QO are from the tunnel parameters, module A.

5. PSI and THETA are from the balance and weight tare calculations, module D. Positive directions for PSI and THETA are shown on Figure E- 2.

6. The constants required from the project engineer are AEXIT1, AEXIT2, PSIN1, PSIN2, THETAN1, THETAN2, AREF, and NPTR2.

If IRAKE = 2, skip the remainder of this section.

$$AI1 = [(FTDOT1) * VO * COS(PSI) * COS(THETA)] - \{[1.4 * (PD1/PTO) * PTO * (MEXIT1)^2] + [((PD1/PTO) * PTO) - PO]\} * (AEXIT1) * COS(PSIN1) * COS(THETAN1)$$

(Eq. E-22)

$$CAI1 = \frac{AI1}{(QO) * (AREF)}$$

(Eq. E-23)

$$CAI = CAI1$$

(Eq. E-24)

If NPTR2 = 0, skip equations E-25, E-26 and E-27.

$$AI2 = [(FTMDOT2) * VO * COS(PSI) * COS(THETA)] - \{[1.4 * (PD2/PTO) * PTO * (MEXIT2)^2] + [((PD2/PTO) * PTO) - PO]\} * (AEXIT2) * COS(PSIN2) * COS(THETAN2)$$

(Eq. E-25)

$$CAI2 = \frac{AI2}{(QO) * (AREF)}$$

(Eq. E-26)

$$CAI = CAI1 + CAI2$$

(Eq. E-27)

O. <u>Internal Normal Force</u>

1. The internal normal force is called NI1 and NI2 for ducts 1 and 2, respectively.

2. The internal normal force coefficient is called CNI1 and CNI2 for ducts 1 and 2, respectively.

3. The total internal normal force coefficient is called CNI.

4. PTO, PO, and QO are from the tunnel parameters, module A.

5. PSI, THETA, and PHI are from the balance and weight tare calculations, module D. Positive directions are shown on Figure E-2.

6. The constants required from the project engineer are AEXIT1, AEXIT2, THETAN1, THETAN2, AREF, and NPTR2.

If IRAKE = 2, skip the remainder of this section.

$$NI1 = \{(FTMDOT1) * VO * [COS(PHI) * SIN(THETA) * COS(PSI) + SIN(PHI) + SIN(PSI)]\}$$
$$+\{[1.4 * (PD1/PTO) * PTO * (MEXIT1)^2] + [((PD1/PTO) * PTO) - PO]\}$$
$$* (AEXIT1) * SIN(THETAN1)$$

(Eq. E-28)

$$CNI1 = \frac{NI1}{(QO) * (AREF)}$$

(Eq. E-29)

$$CNI = CNI1$$

(Eq. E-30)

If NPTR2 = 0, skip equations E-31, E-32 and E-33.

$$NI2 = \{(FTMDOT2) * VO * [COS(PHI) * SIN(THETA) * COS(PSI) + SIN(PHI) + SIN(PSI)]\}$$
$$+\{[1.4 * (PD2/PTO) * PTO * (MEXIT2)^2] + [((PD2/PTO) * PTO) - PO]\}$$
$$* (AEXIT2) * SIN(THETAN2)$$

(Eq. E-31)

$$CNI2 = \frac{NI2}{(QO) * (AREF)}$$

(Eq. E-32)

$$CNI = CNI1 + CNI2$$

(Eq. E-33)

P. <u>Internal Side Force</u>

1. The internal side force is called YI1 and YI2 for ducts 1 and 2, respectively.

2. The internal side force coefficient is called CYI1 and CYI2 for ducts 1 and 2, respectively.

3. The total internal side force coefficient is called CYI.

4. PTO, PO, and QO are from the tunnel parameters, module A.

5. PSI, THETA, and PHI are from the balance and weight tares calculations, module D.

6. The constants required from the project engineer are AEXIT1, AEXIT2, THETAN1, THETAN2, PSIN1, PSIN2, AREF, and NPTR2.

If IRAKE = 2, skip the remainder of this section.

$$YI1 = \{(FTMDOT1) * VO * [SIN(PHI) * SIN(THETA) * COS(PSI) - COS(PHI) * SIN(PSI)]\}$$
$$+\{[1.4 * (PD1/PTO) * PTO * (MEXIT1)^2] + [((PD1/PTO) * PTO) - PO]\}$$
$$* (AEXIT1) * COS(THETAN1) * SIN(PSIN1)$$

(Eq. E-34)

$$CYI1 = \frac{YI1}{(QO) * (AREF)}$$

(Eq. E-35)

$$CYI = CYI1$$

(Eq. E-36)

If NPTR2 = 0, skip equations E-37, E-38 and E-39.

YI2 = {(FTMDOT2) * VO * [SIN(PHI) * SIN(THETA) * COS(PSI) - COS(PHI) * SIN(PSI)]}
+{[1.4 * (PD2/PTO) * PTO * $(MEXIT2)^2$] + [((PD2/PTO) * PTO) - PO]}
* (AEXIT2) * COS(THETAN2) * SIN(PSIN2)

(Eq. E-37)

$$CYI2 = \frac{YI2}{(QO) * (AREF)}$$

(Eq. E-38)

$$CYI = CYI1 + CYI2$$

(Eq. E-39)

Q. <u>Flow-Through Pressure Ratio</u>

1. The nozzle exit (flow-through) total pressure in ratio to free-stream static pressure is called PTD1/PO and PTD2/PO for ducts 1 and 2, respectively.

2. PTO and PO are from tunnel parameters, module A.

If IRAKE = 2, skip the remainder of this section.

$$PTD1/PO = \frac{(PTD1/PTO) * (PTO)}{PO}$$

(Eq. E-40)

If NPTR2 = 0, skip equation E-41.

$$PTD2/PO = \frac{(PTD2/PTO) * (PTO)}{PO}$$

(Eq. E-41)

R. Internal Drag

1. The internal drag coefficient based on the stability axes is called CDIS1 and CDIS2 for ducts 1 and 2, respectively.

2. The total internal drag coefficient in the stability axis is called CDIS.

3. ALPHA is from the balance and weight tares computations, module D.

4. The internal drag coefficient based on the wind axis is called CDI1 and CDI2 for ducts 1 and 2, respectively.

5. The total internal drag coefficient in the wind axis is called CDI.

6. BETA is from module D.

If IRAKE = 2, skip the remainder of this section.

CDIS1 = (CNI1) * SIN(ALPHA) + (CAI1) * COS(ALPHA) (Eq. E-42)

CDI1 = (CDIS1) * COS(BETA) - (CYI1) * SIN(BETA) (Eq. E-43)

CDIS = CDIS1 (Eq. E-44)

CDI = CDI1 (Eq. E-45)

If NPTR2 = 0, skip equations E-46, E-47, E-48 and E-49.

CDIS2 = (CNI2) * SIN(ALPHA) + (CAI2) * COS(ALPHA) (Eq. E-46)

CDI2 = (CDIS2) * COS(BETA) - (CYI2) * SIN(BETA) (Eq. E-47)

CDIS = CDIS1 + CDIS2 (Eq. E-48)

CDI = CDI1 + CDI2 (Eq. E-49)

S. Internal Lift

1. The internal lift coefficient based on stability axis (also wind axis) is called CLI1 and CLI2 for ducts 1 and 2, respectively.

2. The total internal lift coefficient is called CLI.

3. ALPHA is from the balance and weight tares computations in module D.

If IRAKE = 2, skip the remainder of this section.

CLI1 = (CNI1) * COS(ALPHA) - (CAI1) * SIN(ALPHA) (Eq. E-50)

CLI = CLI1 (Eq. E-51)

If NPTR2 = 0, skip equations E-52 and E-53.

CLI2 = (CNI2) * COS(ALPHA) - (CAI2) * SIN(ALPHA) (Eq. E-52)

CLI = CLI1 + CLI2 Eq. E-53)

T. Internal Drag and Axial Force Tables

If IRAKE ≠ 3, skip this section.

CAI, CDSI, and CDI are supplied in tables as functions of MACH, ALPHA and PSI.

U. Internal Drag from Internal Static Pressures

If IRAKE is 4, the following formulas are used. When the Mach number, MACH, is less than 0.1, then

CAI1 = CNI1 = CAI = CNI = CDIS = CDI = CLI = CYI[1] = CY1 =

MPM01 = MEXIT = MODOTI = FTMDOT1 = 0.0

(Eq. E-54)

For the Mach number, MACH, greater than 0.1, the following formulas are used.

The area, AEXIT1, is used to interpolate R vs. Z to obtain YM.

Then the average pressure, PL, is the average of the static pressures

$$PL = \frac{\sum_{I=1}^{NPR1} PRAKE(I)}{NPR1}$$

(Eq. E-55)

When PL is greater than PTO, then go to equation (54).

The Mach number, ML, is computed as

$$ML = \sqrt{5\left(\left(\frac{PTO}{PL}\right)^{2/7} - 1\right)}$$

(Eq. E-56)

The ratio, BRATIO, becomes

$$BRATIO = \frac{1.728\,ML}{\left(1 + 0.2\,ML^2\right)^3}$$

(Eq. E-57)

Then the area, ASTAR, is

$$ASTAR = \Pi * YM^2 * BRATIO$$

(Eq. E-58)

The Mach number ratio, MFR, is

$$MFR = \frac{ML}{MACH}\left(\frac{\left(1+0.2\,MACH^2\right)}{1+0.2\,ML^2}\right)^3\left(\frac{YM}{R(1)}\right)^2$$

(Eq. E-59)

The drag coefficients are now computed.

The ratio value, BRATIO, is computed

$$BRATIO = \frac{ASTAR}{\Pi R(I)^2}$$

(Eq. E-60)

The value of the Mach number, M, is computed which satisfies

$$1.728M/(1 + 0.2M^2)^3 - BRATIO = 0$$ (Eq. E-61)

The static pressure, PL, is then computed

$$PL = \frac{PTO}{(1+0.2\,M^2)^{7/2}}$$

(Eq. E-62)

The pressure coefficient, CP(I), is

$$CP(I) = (PL - PO)/QO \qquad \text{(Eq. E-63)}$$

The dynamic pressure, Q(I), is

$$Q(I) = 0.7 * PL * M^2 \qquad \text{(Eq. E-64)}$$

The slope, SLOPE, is

$$SLOPE = TAN^{-1}((R(I) - R(I - 1))/(Z(I) - Z(I - 1))) \qquad \text{(Eq. E-65)}$$

The value of SL becomes

$$SL = \Pi(R(I) + R(I-1))\sqrt{(R(I) - R(I-1))^2 + (Z(I) - Z(I-1))^2}\ (M) \qquad \text{(Eq. E-66)}$$

The value of SWET is

$$SWET = \sum_{i=1}^{NPRI} SL\ COS\ (SLOPE)\ /\ AREF \qquad \text{(Eq. E-67)}$$

The value of QRATIO is

$$QRATIO = \sum_{I=1}^{NPRI} \frac{(Q(I) + Q(I-1))\ SL * COS(SLOPE)}{2QS} \qquad \text{(Eq. E-68)}$$

The value of CDPA is

$$CDPA = -\sum_{I=1}^{NPR1} \frac{\Pi}{AREF} (R(I)\,CP(I) + R(I-1)\,CP(I-1))\,(R(I) - R(I-1))$$

(Eq. E-69)

The Mach number, MEFF, is computed to satisfy

$$\left(\frac{MEFF}{MACH}\right)^2 \left(\frac{(1+0.2\,MACH^2)}{(1+0.2\,MEFF^2)}\right)^{7/2} - QRATIO = 0$$

(Eq. E-70)

The static temperature, TE, is

$$TE = \frac{TTO + 459.67}{1 + 0.2\,MEFF^2}$$

(Eq. E-71)

The density, RHOE, is

$$RHOE = \frac{144.0 * PO}{1716.4829\,TE}$$

(Eq. E-72)

The viscosity, VISE, is

$$VISE = \frac{2.27 * 10^{-8} * TE * \sqrt{TE}}{TE + 198.6}$$

(Eq. E-73)

The free-stream velocity is

$$UE = 49.021179 * MEFF * \sqrt{TE}$$

(Eq. E-74)

The local Reynolds number is

$$RNA = \frac{RHOE * UE * Z(NPRT1)}{12 * VISE}$$

(Eq. E-75)

When the Reynolds number is positive and nonzero

$$CF0 = \frac{0.472}{(LOG_{10}(RNA))^{2.58}\left(1 + 0.2\,MEFF^{2}\right)^{0.467}}$$

(Eq. E-76)

Then

$$COF = CF0 * QRATIO * SWET$$

(Eq. E-77)

The pre-entry drag, CDPRE, is

$$CDPRE = -\left(2\,MFR\left(\frac{M(1)}{MACH}\sqrt{\frac{1 + 0.2\,MACH^{2}}{1 + 0.2\,M^{2}} - COS(ALPHA)}\right) + CP(I)\right)$$

$$* \quad \frac{\Pi\,R\,(1)^{2}}{AREF}$$

(Eq. E-78)

$$CAI1 = CDPRE + (CDPA + COF)\ COS\ (PSIN)\ COS\ (THETAN)$$

(Eq. E-79)

The internal normal force coefficient is

$$CAI1 = 2 * MFR * \frac{\Pi\ R(I)^2}{AREF} SIN(ALPHA) + (CDPA + COF)\ SIN(THETAN)$$

(Eq. E-80)

The total axial force coefficient is

$$CAI = NPRT2 * CAI1 \qquad \text{(Eq. E-81)}$$

The total normal force coefficient is

$$CNI = NPRT2 * CNI1 \qquad \text{(Eq. E-82)}$$

The total internal drag force coefficient in the stability axis is

$$CDIS = CNI * SIN(ALPHA) + CAI * COS(ALPHA) \qquad \text{(Eq. E-83)}$$

The total internal drag force coefficient in the wind axis is

$$CDI = CDIS * COS(BETA) \qquad \text{(Eq. E-84)}$$

The total internal lift coefficient is

$$CLI = CNI * COS(ALPHA - CAI * SIN(ALPHA) \qquad \text{(Eq. E-85)}$$

The total internal side force coefficient is

The total internal side force coefficient is

$$CYI1 = CYI = 0.0 \qquad \text{(Eq. E-86)}$$

The mass flow ratio is

$$M/M01 = MFR \qquad \text{(Eq. E-87)}$$

The average exit Mach number is

$$MEXIT1 = ML(NPRT1) \qquad \text{(Eq. E-88)}$$

The mass flow rate based on free-stream conditions is

$$MODOT1 = 0.028563 * SCAP1 * MACH * PO * \sqrt{1 + 0.2\,MACH^2}$$

(Eq. E-89)

The mass flow ratio at exit is

$$FTMDOT1 = MFR * MODOT1$$

(Eq. E-90)

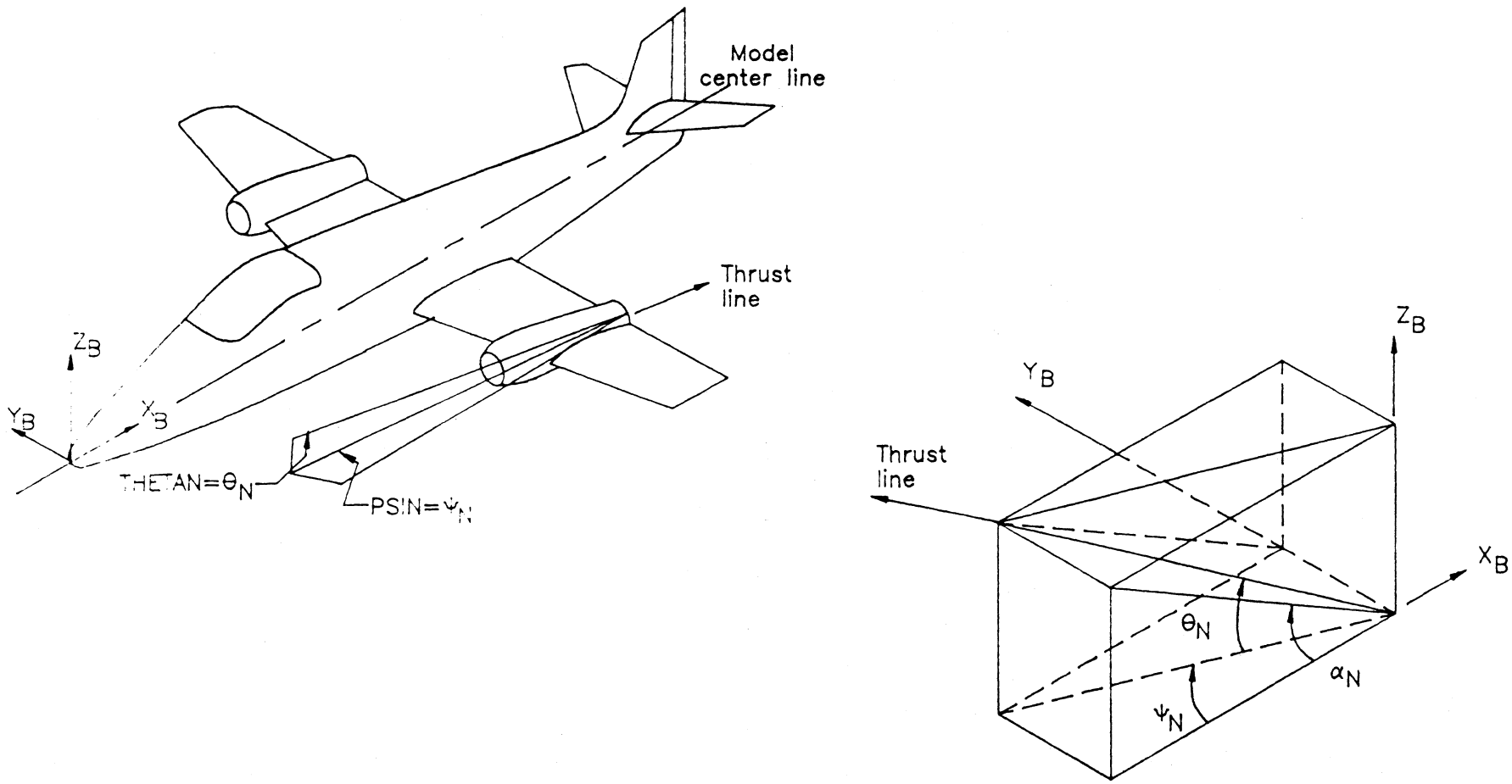

Figure E–1. Definition of thrust angles.

PSI $= \psi =$ Euler yaw angle $= \angle ABC$
THETA $= \theta =$ Euler pitch angle $= \angle CBD$ [Note: $\theta \neq \alpha$ unless $\phi = 0°$]
PHI $= \phi =$ Euler roll angle $= \angle CDE$ [Note: Line DE is not in plane of paper, but rotated about line BD]

ALPHA $= \alpha =$ angle of attack $= \angle DBE$

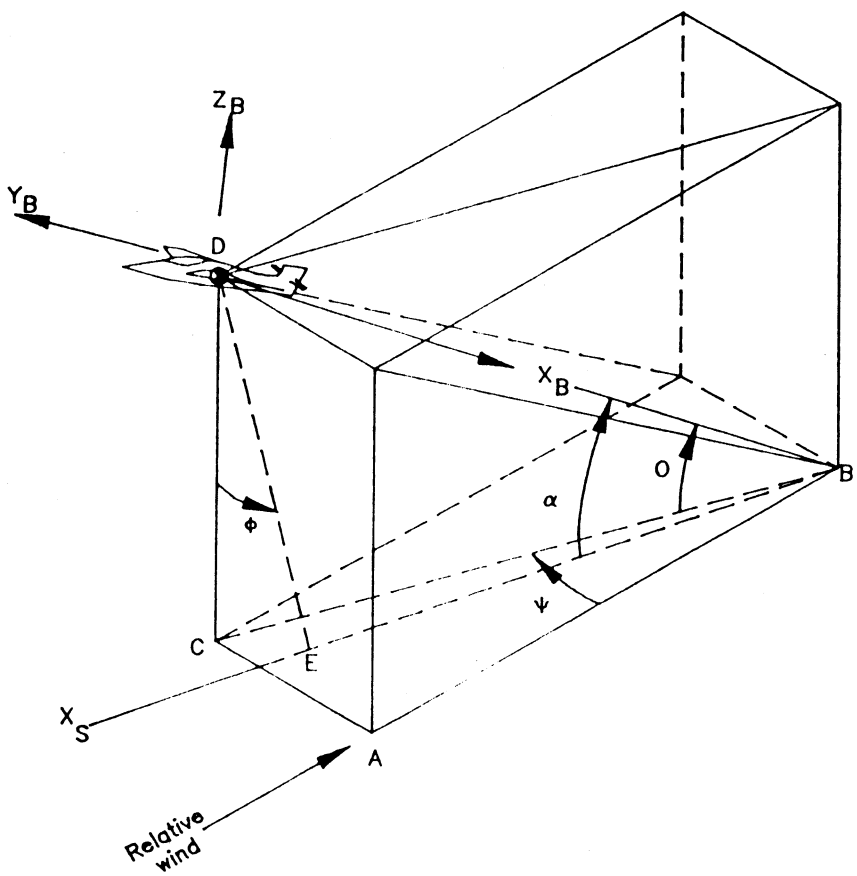

Figure E-2. Definition of Euler angles and directions.

APPENDIX F

APPENDIX F

Pressure Coefficients and Integrated Forces

MODULE F PRESSURE COEFFICIENT AND INTEGRATED FORCES

SYMBOL		NOMENCLATURE
ARAAU(I) ARABU(I) ARADU(I) ARAFU(I) ARAGU(I) ARAHU(I) ARANU(I) ARASU(I)	Axial Force	Areas to be used with pressure groups to compute integrated forces, where I = orifice number, sq. in.
AREF		Model reference area from module B, sq. in.
ARHAU(I) ARHBU(I) ARHDU(I) ARHFU(I) ARHGU(I) ARHHU(I) ARHNU(I) ARHSU(I)	Hinge Moment	Areas times moment arm to be used with pressure groups to compute integrated forces, where I = orifice number, sq. in.
ARNAU(I) ARNBU(I) ARNDU(I) ARNFU(I) ARNGU(I) ARNHU(I) ARNNU(I) ARNSU(I)	Normal Force	Areas to be used with pressure groups to compute integrated forces, where I = orifice number, sq. in.
ARPAU(I) ARPBU(I) ARPDU(I) ARPFU(I) ARPGU(I) ARPHU(I) ARPNU(I) ARPSU(I)	Pitch Moment	Area times moment arm to be used with pressure groups to compute integrated moments, I = orifice number, sq. in.

SYMBOL	NOMENCLATURE
CBAR	Pitching moment reference length module D, in.
CDAUN(I) CDBUN(I) CDDUN(I) CDFUN(I) CDGUN(I) CDHUN(I) CDNUN(I) CDSUN(I)	Integrated pressure drag coefficients.
CDPR	Total integrated drag coefficient.
CFAUN(I) CFBUN(I) CFDUN(I) CFFUN(I) CFGUN(I) CFHUN(I) CFNUN(I) CFSUN(I)	Integrated pressure axial force coefficients.
CHMAUN(I) CHMBUN(I) CHMDUN(I) CHMFUN(I) CHMGUN(I) CHMHUN(I) CHMNUN(I) CHMSUN(I)	Integrated pressure hinge moment coefficients.
CLAUN(I) CLBUN(I) CLDUN(I) CLFUN(I) CLGUN(I) CLHUN(I) CLNUN(I) CLSUN(I)	Integrated pressure lift coefficients.

CLPR	Total integrated lift coefficient.
CNAUN(I) CNBUN(I) CNDUN(I) CNFUN(I) CNGUN(I) CNHUN(I) CNNUN(I) CNSUN(I)	Integrated pressure normal force coefficients.
CPMAUN(I) CPMBUN(I) CPMDUN(I) CPMFUN(I) CPMGUN(I) CPMHUN(I) CPMNUN(I) CPMSUN(I)	Integrated pressure pitching moment coefficients.
CPMPR	Total integrated pitching moment coefficient.
KCDA	Constants provided by the engineer. (See note)
KCDB	Constants provided by the engineer. (See note)
KCDD	Constants provided by the engineer. (See note)
KCDF	Constants provided by the engineer. (See note)
KCDG	Constants provided by the engineer. (See note)
KCDH	Constants provided by the engineer. (See note)
KCDN	Constants provided by the engineer. (See note)
KCDS	Constants provided by the engineer. (See note)
PAUN(I) PBUN(I) PDUN(I) PFUN(I) PGUN(I) PHUN(I) PNUN(I) PSUN(I)	Individual pressures to be used with each type of pressure coefficient for computation of integrated forces and moments. Maximum number of each type is 125.

PRATI(II)	Ratio of nozzle internal static pressure to nozzle total pressure, where II = orifice number (PGUN only).

<u>NOTE</u>: Enter 1.0 if term is to be included in the total pressure drag coefficient, or 0.0 if it is to be excluded.

APPENDIX F

Module F

Pressure Coefficients and Integrated Forces

Eight groups of pressure coefficients may be computed under this module. Names assigned to each group are arbitrary. Final names may be inserted with finalized data printout headers. These groups are PAUN, PBUN, PDUN, PFUN, PGUN, PHUN, PNUN, and PSUN.

A. Required Constants

The required constants for module F are given in the nomenclatures.

1. All constants are initialized to a value of zero. The project engineer need only supply those constants which are required for those quantities to be computed.

2. KAUN, KBUN, KDUN, KFUN, KGUN, KHUN, KNUN, KSUN - number of individual pressures to be used with each type of pressure coefficient for computation of integrated forces and moments. (125 maximum for each type)

B. Test for Module F Computations

If KPRESS = 0, skip this module.

If KPRESS = 1 performs calculations as listed in module along with ratio of engine static pressure to engine total pressure.

If KPRESS = 2 performs calculations as listed in module along with ratio of engine static pressure to free stream total pressure.

C. Free-Stream Static and Dynamic Pressures

Free-stream static and dynamic pressures to be used for computing pressure coefficients are obtained from module A; however, for individual pressure transducers, an average value is used.

D. <u>Coefficient Calculations</u>

$$CPSUN(I) = (PSUN(I) - PO)/QO$$

(Eq. F-1)

$$CFSUN = \sum_{I=1}^{KSUN} CPSUN(I) * ARASU(I) / AREF$$

(Eq. F-2)

$$CNSUN = \sum_{I=1}^{KSUN} CPSUN(I) * ARASU(I) / AREF$$

(Eq. F-3)

$$CPMSUN = \sum_{I=1}^{KSUN} CPSUN(I) * ARPSU(I) / AREF * CBAR$$

(Eq. F-4)

$$CHMSUN = \sum_{I=1}^{KSUN} CPSUN(I) * ARHSU(I) / AREF * CBAR$$

(Eq. F-5)

$$CDSUN = CFSUN * COS(ALPHA) + CNSUN * SIN(ALPHA)$$

(Eq. F-6)

$$CLSUN = CNSUN * COS(ALPHA) - CFSUN * SIN(ALPHA)$$

(Eq. F-7)

These equations are the same for all pressure groups.

E. Total Pressure Drag Coefficient

CDPRessure = KCDS * CDSUN + KCDA * CDAUN + KCDB * CDBUN + KCDN * CDNUN + KCDD * CDDUN + KCDF * CDFUN + KCDG * CDGUN + KCDH * CDHUN

(Eq. F-8)

where KCDS, KCDB, KCDA, KCDN, KCDD, KCDF, KCDG, KCDH are constant inputs, 1.0 if term is to be included in the total pressure drag coefficient, or 0.0 if it is to be excluded.

F. Internal Static Pressure Ratio

If KPRESS = 1

PRATI(Π) = PGUN(Π)/PTENG1 (Eq. F-9)

If KPRESS = 2

PRATI(II) = PGUN (II)/PTO

(Eq. F-10)

NOTE: In addition to the pressure coefficients, this ratio is for PGUN measurements only.

APPENDIX G

APPENDIX G

Thrust Removal Options

MODULE G THRUST REMOVAL OPTIONS

SYMBOL	NOMENCLATURE
AEX	Nozzle exit area.
CAAERO	Thrust removed axial force coefficient.
CASCADE	Resultant angle of jet exhaust, degrees.
CDAERO	Thrust removed drag coefficient.
CDNOZ	Nozzle drag.
C(F-ANOZ)	Thrust minus nozzle axial force coefficient.
C(F-DNOZ)	Thrust minus nozzle drag coefficient.
CDSAER	Thrust removed stability axis drag coefficient.
CDWAER	Thrust removed wind axis drag coefficient.
CF	Jet axial force coefficient (from balance and pressures).
CF/CFI	Ratio of thrust (from balance and pressures) to ideal thrust.
CFJ	Jet axial force coefficient.
CFJC	Computed jet axial force coefficient.
CFJET	Jet reaction axial force coefficient.
C(F-A)	Thrust minus axial force coefficient.
C(F-D)	Thrust minus drag coefficient.
CLAERO	Thrust removed lift coefficient.
CLJET	Jet reaction lift coefficient.
CLNOZ	Thrust removed nozzle lift.
CLNOZT	Nozzle lift plus thrust.
CLSAER	Thrust removed stability axis lift coefficient.
CLWAER	Thrust removed wind axis lift coefficient.
CMAERO	Thrust removed pitching moment coefficient.
CMJ	Jet pitching moment coefficient.

SYMBOL	NOMENCLATURE
CMJC	Computed jet pitching moment coefficient.
CMJET	Jet reaction pitching moment coefficient.
CMNOZ	Thrust removed nozzle pitching moment.
CMNOZT	Nozzle pitching moment plus lift.
CMSAER	Thrust removed stability axis pitching moment coefficient.
CMWAER	Thrust removed wind axis pitching moment coefficient.
CNAERO	Thrust removed normal force coefficient.
CNJ	Jet normal force coefficient.
CNJC	Computed jet normal force coefficient.
CRAERO	Thrust removed rolling moment coefficient.
CRJC	Computed jet rolling moment coefficient.
CRJET	Jet reaction rolling moment coefficient.
CRSAER	Thrust removed stability axis rolling moment coefficient.
CRWAER	Thrust removed wind axis rolling moment coefficient.
CSAERO	Thrust removed side force coefficient.
CSJC	Computed jet side force coefficient.
CSJET	Jet reaction side force coefficient.
CSSAER	Thrust removed stability axis side force coefficient.
CSWAER	Thrust removed wind axis side force coefficient.
CT	Computed resultant thrust coefficient about pitch axis.
CTS	Resultant static thrust coefficient, main balance, about pitch axis.
CTST	Resultant static thrust coefficient, main balance.
CTSY	Resultant static thrust coefficient, main balance, about yaw axis.

SYMBOL	NOMENCLATURE
CTS2	Resultant static thrust coefficient, second balance, about pitch axis.
CTS2T	Resultant static thrust coefficient, second balance.
CTS2Y	Resultant static thrust coefficient, second balance, about yaw axis.
CTT	Computed resultant thrust coefficient.
CTY	Computed resultant thrust coefficient about yaw axis.
CYAERO	Thrust removed yawing moment coefficient.
CYJC	Computed jet yawing moment coefficient.
CYJET	Jet reaction yawing moment coefficient.
CYSAER	Thrust removed stability axis yawing moment coefficient.
CYWAER	Thrust removed wind axis yawing moment coefficient.
DELTA	Computed thrust vector angle about pitch axis, degrees.
DELTAY	Computed thrust vector angle about yaw axis, degrees.
DELTA1	Static thrust vector angle, main balance, about pitch axis, degrees.
DELTA2	Static thrust vector angle, second balance, about pitch axis, degrees.
DELT1Y	Static thrust vector angle, main balance, about yaw axis, degrees.
DELT2Y	Static thrust vector angle, second balance, about yaw axis, degrees.
ETAABS	Isentropic vacuum or stream thrust coefficient.
(F-A)/FI	Ratio of thrust minus axial force to ideal thrust.
(F-ANOZ)/FI	Ratio of thrust minus nozzle axial force to ideal thrust.
FGT/FI	Total static resultant thrust ratio, main balance.
FGT2/FI	Total static resultant thrust ratio, second balance.
FGY/FI	Static resultant thrust ratio, main balance, about yaw axis.

SYMBOL	NOMENCLATURE
FG/FI	Static resultant thrust ratio, main balance, about pitch axis.
FG2/FI	Static resultant thrust ratio, second balance, about pitch axis.
FG2Y/FI	Static resultant thrust ratio, second balance, about yaw axis.
FJ1/FI	Static thrust ratio, main balance.
FJ2/FI	Static thrust ratio, second balance.
(F-D)/FI	Ratio of thrust minus drag to ideal thrust.
(F-DNOZ)/FI	Ratio of thrust minus nozzle drag to ideal thrust.
FN/FI	Ratio of normal force to ideal thrust.
FT/FI	Total resultant thrust ratio.
F/FI	Ratio of thrust to ideal thrust.
IDA	Engineer's option.
IDN	Future option.
IF	Computes thrust and static thrust terms when IF=1.
IF1	Computes single balance/all metric when IF1=1.
IF2	Computes single balance/afterbody metric when IF2=1.
IFAF	Single balance, thrust removal from all components.
IFAF1	Computes two balances/afterbody metric when IFAF1=1.
IFAF2	Computes two balances/afterbody metric when IFAF2=1.
IFAFN	Future option.
IFAFN1	Computes two balances/afterbody metric when IFAFN1=1.
IFAFN2	Computes two balances/afterbody metric when IFAFN2=1.
LENGTH(I)	Lengths for transferring moments to relative station.
PM/FI	Ratio of pitching moment to ideal thrust.
RM/FI	Ratio of rolling moment to ideal thrust.
SF/FI	Ratio of side force to ideal thrust.

SYMBOL	NOMENCLATURE
SPLAY	Projected roll angle of jet exhaust, degrees.
SPLAY1	Projected roll angle of jet exhaust, degrees.
YM/FI	Ratio of yawing moment to ideal thrust.

APPENDIX G

Module G

Thrust Removal Options

A. General Information

The following options are used to remove thrust and to obtain various aerodynamic and aeropropulsion parameters usually required for most 16-Ft. Transonic Tunnel investigations. The various constants are keyed to typical balance arrangements used and may be used for most test setups. This section requires computed inputs from modules A, B, C, D and F. The engineer should refer to each module for exact definition of the computed quantity. These options will work for both fully and partially metric models for both longitudinal and lateral data.

B. Required Constants

1. IF, IF1, IF2, IFAF, IFAF1, IFAF2, IFAFN, IFAFN1, IFAFN2, ID and IDN.

C. Quantities Required

1. MODULE A
   a. PO & QO

2. MODULE B
   a. NPR
   b. CFI

3. MODULE C
   a. CDFAFT - afterbody + nozzle skin friction
   b. CDFNOZ - nozzle skin friction

4. MODULE D

   1. ALPHA
   2. CN1, CA1, CMY1

      CY1, CMX1, CMZ1 MAIN BALANCE
   3. CDS1, CLS1
   4. CN2, CA2, CMY2

      CY2, CMX2, CMZ2 SECOND BALANCE (2)
   5. CDS2, CLS2

5. <u>MODULE F</u>

   1. CFSUN, CNSUN, CPMSUN
   2. CDSUN, CLSUN AFTERBODY PRESSURE FORCES
   3. CFBUN, CNBUN, CPMBUN
   4. CDBUN, CLBUN NOZZLE PRESSURE FORCES

D. <u>Compute Thrust and Static Thrust Terms IF = 1</u>

1. Compute Thrust

The value of NPR is the average nozzle pressure ratio from each air system.

a. IF NPR ≤ 1.2, CFJ = CMJ = 0 = CRJ = CYJ = CSJ

b. The computed jet axial force coefficient is

$$CFJC = \frac{PO}{QO} * [KCFJ(NPR) + ICFJ]$$

(Eq. G-1)

c. The computed jet normal force coefficient is

$$CNJC = \frac{PO}{QO} * [KCNJ(NPR) + ICNJ]$$

(Eq. G-2)

d. The computed jet pitching moment coefficient is

$$CMJC = \frac{PO}{QO} * [KCMJ(NPR) + ICMJ]$$

(Eq. G-3)

e. The computed jet rolling moment coefficient is

$$CRJC = \frac{PO}{QO} * [KCRJ(NPR) + ICRJ]$$

(Eq. G-4)

f. The computed jet yawing moment coefficient is

$$CYJC = \frac{PO}{QO} * [KCYJ(NPR) + ICYJ]$$

(Eq. G-5)

g. The computed jet side force coefficient is

$$CSJC = \frac{PO}{QO} * [KCSJ(NPR) + ICSJ]$$

(Eq. G-6)

h. Table input is as follows: (Need six tables) Up to five values per table may be used.

NPR Range	Slope	Intercept

2. Compute Static Thrust Terms

a. The resultant static thrust coefficient about the pitch axis for the main balance is

$$CTS = \sqrt{CN1^2 + CA1^2}$$

(Eq. G-7)

b. The resultant static thrust ratio about the pitch axis for the main balance is, where CFI is the average of each air system

$$FG/FI = CTS/CFI$$

(Eq. G-8)

c. The static thrust ratio for the main balance is

$$FJ1/FI = -CA1/CFI$$

(Eq. G-9)

d. The static thrust vector angle about the pitch axis for the main balance is

$$DELTA1 = TAN^{-1}(-CN1/CA1)$$

(Eq. G-10)

e. The resultant static thrust coefficient about the yaw axis for the main balance is

$$CTSY = \sqrt{CY1^2 + CA1^2}$$

(Eq. G-11)

f. The resultant static thrust ratio about the yaw axis for the main balance is

$$FGY/FI = CTSY/CFI$$

(Eq. G-12)

g. The static thrust vector angle about the yaw axis for the main balance is

$$DELTA1Y = TAN^{-1}\ (-CY1/CA1)$$

(Eq. G-13)

h. The resultant static thrust coefficient for the main balance is (Eq. G-14)

$$CTST = \sqrt{CN1^2 + CA1^2 + CY1^2}$$

i. The total resultant static thrust ratio for the main balance is

$$FGT/FI = CTST/CFI$$

(Eq. G-15)

j. The isentropic vacuum thrust or stream thrust coefficient.

Specific equations to be supplied when required by test hardware.

k. The nozzle exit Mach number ME is computed from

$$AS / AEX = \frac{216}{125} ME\ (1 + 0.2ME^2)^{-3}$$

(Eq. G-16)

where AS = WPWITO(M) * AT(1).

and the nozzle exit pressure ratio is from

$$PE/PTJ = (1 + 0.2\ ME^2)^{-7/2}$$

(Eq. G-17)

l. The resultant static thrust coefficient about the pitch axis for the second balance is

$$CTS2 = \sqrt{CN2^2 + CA2^2}$$

(Eq. G-18)

m. The resultant static thrust ratio about the pitch axis for the second balance is

$$FG2/FI = CTS2/CFI$$

(Eq. G-19)

n. The static thrust ratio for the second balance is

$$FJ2/FI = -CA2/CFI$$

(Eq. G-20)

o. The static thrust vector angle about the pitch axis for the second balance is

$$DELTA2 = TAN^{-1}\ (-CN2/CA2)$$

(Eq. G-21)

p. The resultant static thrust coefficient about the yaw axis for the second balance is

$$CTS2Y = \sqrt{CY2^2 + CA2^2}$$

(Eq. G-22)

q. The resultant static thrust ratio about the yaw axis for the second balance is

$$FG2Y/FI = CTS2Y/CFI$$

(Eq. G-23)

r. The static thrust vector angle about the yaw axis for the second balance is

$$DELTA2Y = TAN^{-1}(-CY2/CA2)$$

(Eq. G-24)

s. The resultant static thrust coefficient for the second balance is

$$CTS2T = \sqrt{CY2^2 + CA2^2 + CY2^2}$$

(Eq. G-25)

t. The total resultant static thrust ratio for the second balance is

$$FGT2 = CTS2T/CFI$$

(Eq. G-26)

u. The splay angle is

$$SPLAY = ATAN(CY1/CN1)$$

(Eq. G-27)

v. The cascade angle is

$$CASCADE = TAN^{-1}\left(\frac{TAN(DELTA1)}{\sqrt{1 + TAN^2(SPLAY) * TAN^2(DELTA1)}}\right)$$

(Eq. G-28)

w. The ratio of normal force to ideal thrust is

$$FN/FI = CN1/CFI$$

(Eq. G-29)

x. The ratio of side force to ideal thrust is

$$SF/FI = CY1/CFI$$

(Eq. G-30)

y. The ratio of rolling moment to ideal thrust is

$$RM/FI = CMX1/(CFI * LENGTH1)$$

(Eq. G-31)

z. The ratio of pitching moment to ideal thrust is

$$PM/FI = CMY1/(CFI * LENGTH2)$$

(Eq. G-32)

aa. The ratio of yawing moment to ideal thrust is

$$YM/FI = CMZ1/(CFI * LENGTH3)$$

(Eq. G-33)

E. <u>Single Balance/All Metric IF1 = 1</u>

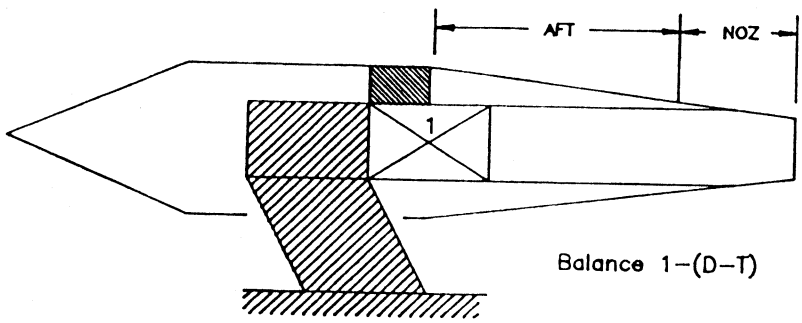

1. The resultant thrust coefficient about the pitch axis is

$$CT = \sqrt{CNJC^2 + CFJC^2}$$

(Eq. G-34)

2. The thrust vector about the pitch axis is

$$DELTA = TAN^{-1} (CNJC/CFJC)$$

(Eq. G-35)

3. The jet reaction lift coefficient is

$$CLJET = CT [SIN (ALPHA + DELTA)]$$

(Eq. G-36)

4. The jet reaction axial force coefficient is

$$CFJET = CT\ [COS\ (ALPHA + DELTA)]$$

(Eq. G-37)

5. The thrust removed lift coefficient is

$$CLAERO = CLS1 - CLJET$$

(Eq. G-38)

6. The thrust removed drag coefficient is

$$CDAERO = CDS1 + CFJET$$

(Eq. G-39)

7. The thrust removed pitching moment coefficient is

$$CMAERO = CMYS1 - CMJC$$

(Eq. G-40)

8. The thrust minus axial force coefficient is

$$C(F - A) = -CA1$$

(Eq. G-41)

9. The thrust minus drag coefficient is

$$C(F - D) = -CDS1$$

(Eq. G-42)

10. The ratio of thrust minus axial force to ideal thrust is

$$(F - A)/FI = C(F - A)/CFI$$

(Eq. G-43)

11. The ratio of thrust minus drag to ideal thrust is

$$(F - D)/FI = C(F - D)/CFI$$

(Eq. G-44)

12. The ratio of thrust to ideal thrust is

$$F/FI = CFJC/CFI$$

(Eq. G-45)

13. The thrust minus nozzle drag coefficient is

$$C(F - DNOZ) = CFJET - CDBUN$$

(Eq. G-46)

14. The ratio of thrust minus nozzle drag to ideal thrust is

$$(F - DNOZ)/FI = C(F - DNOZ)/CFI$$

(Eq. G-47)

F. Single Balance/Afterbody Metric IF2 = 1

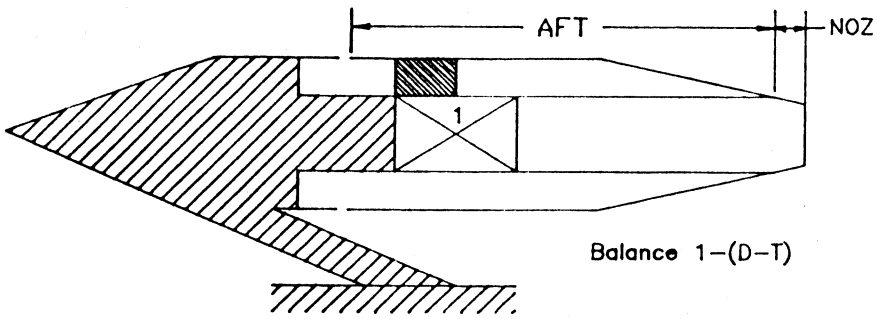

1. The resultant thrust coefficient about the pitch axis is

$$CT = \sqrt{CNJC^2 + CFJC^2}$$

(Same as Eq. G-34)

2. The thrust vector angle about the pitch axis is

$$DELTA = TAN^{-1} (CNJC/CFJC)$$

(Same as Eq. G-35)

3. The jet reaction lift coefficient is

$$CLJET = CT [SIN (ALPHA + DELTA)]$$

(Same as Eq. G-36)

4. The jet reaction axial force coefficient is

$$CFJET = CT\ [COS\ (ALPHA + DELTA)]$$

(Same as Eq. G-37)

5. The thrust removed lift coefficient is

$$CLAERO = CLS1 - CLJET$$

(Same as Eq. G-38)

6. The thrust removed drag coefficient is

$$CDAERO = CDS1 + CFJET$$

(Same as Eq. G-39)

7. The thrust removed pitching moment coefficient is

$$CMAERO = CMYS1 - CMJC$$

(Same as Eq. G-40)

8. The thrust minus axial force coefficient is

$$C(F - A) = -CA1$$

(Same as Eq. G-41)

9. The thrust minus drag coefficient is

$$C(F - D) = -CDS1$$

(Same as Eq. G-42)

10. The ratio of thrust minus axial force to ideal thrust is

$$(F - A)/FI = C(F - A)/CFI$$

(Same as Eq. G-43)

11. The ratio of thrust minus drag to ideal thrust is

$$(F - D)/FI = C(F - D)/CFI$$

(Same as Eq.G-44)

12. The thrust minus nozzle drag coefficient is

$$C(F - DNOZ) = C(F - D) + (CDFAFT - CDFNOZ)$$

(Eq. G-48)

13. The ratio of thrust minus nozzle drag to ideal thrust is

$$(F - DNOZ)/FI = C(F - DNOZ)/CFI$$

(Eq. G-49)

14. The ratio of thrust to ideal thrust is

$$F/FI = [C(F - DNOZ) + CDFNOZ + CDBUN]/CFI$$

(Eq. G-50)

G. Two-Balance/Afterbody Metric IFAF1 = 1

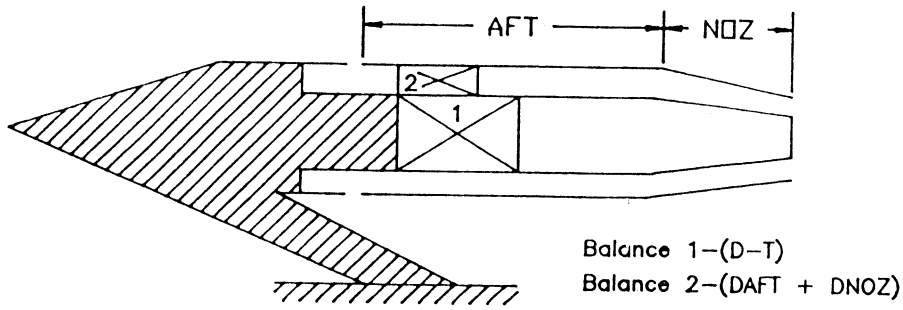

1. The jet axial force coefficient is

$$CFJ = CA2 - CA1$$

(Eq. G-51)

2. The jet normal force coefficient is

$$CNJ = CN1 - CN2$$

(Eq. G-52)

3. The jet pitching moment coefficient is

$$CMJ = CMY1 - CMY2$$

(Eq. G-53)

4. The resultant thrust coefficient about the pitch axis is

$$CT = \sqrt{CFJ^2 + CNJ^2}$$

(Eq. G-54)

5. The thrust vector angle about the pitch axis is

$$DELTA = TAN^{-1}\ (CNJ/CFJ)$$

(Eq. G-55)

6. The thrust removed lift coefficient is

$$CLAERO = CLS2$$

(Eq. G-56)

7. The thrust removed drag coefficient is

$$CDAERO = CDAS2$$

(Eq. G-57)

8. The thrust removed pitching moment coefficient is

$$CMAERO = CYMS2$$

(Eq. G-58)

9. The thrust minus axial force coefficient is

$$C(F - A) = -CA1$$

(Same as Eq. G-41)

10. The thrust minus drag coefficient is

$$C(F - D) = -CDS1$$

(Same as Eq. G-42)

11. The ratio of thrust minus axial force to ideal thrust is

$$(F - A)/FI = C(F - A)/CFI$$

(Same as Eq. G-43)

12. The ratio of thrust minus drag to ideal thrust is

$$(F - D)/FI = C(F - D)/CFI$$

(Same as Eq. G-44)

13. The thrust minus nozzle drag coefficient is

$$C(F - DNOZ) = C(F - D) + (CDFAFT - CDFNOZ) + CDSUN$$

(Eq. G-59)

14. The ratio of thrust minus nozzle drag to ideal thrust is

$$(F - DNOZ)/FI = C(F - DNOZ)/CFI$$

(Same as Eq. G-49)

15. The ratio of thrust to ideal thrust is

$$F/FI = CFJ/CFI$$

(Eq. G-60)

16. The jet reaction lift coefficient is

$$CLJET = CT\ [SIN(ALPHA + DELTA)]$$

(Eq. G-61)

17. The jet reaction axial force coefficient is

$$CFJET = CT\ [COS(ALPHA + DELTA)]$$

(Eq. G-62)

H. <u>Two-Balance/Afterbody Metric IFAF2 = 1</u>

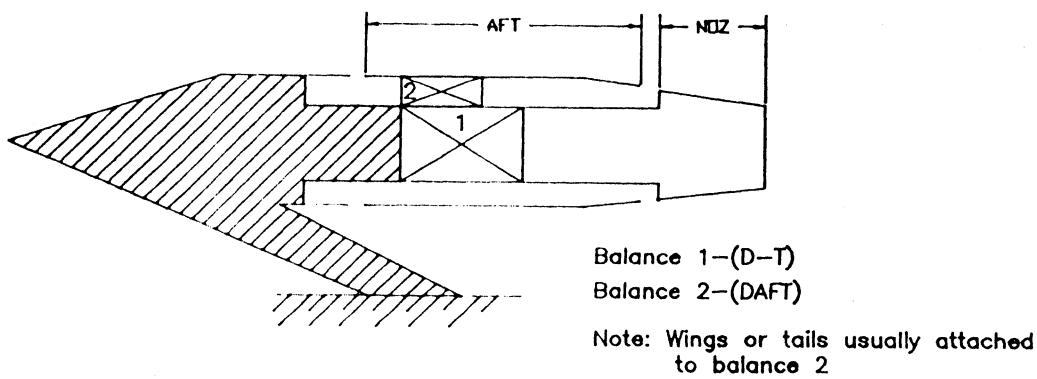

1. The thrust removed lift coefficient is

$$CLAERO = CLS2$$

(Same as Eq. G-56)

2. The thrust removed drag coefficient is

$$CDAERO = CDS2$$

(Same as Eq. G-57)

3. The thrust removed pitching moment coefficient is

$$CMAERO = CYMS2$$

(Same as Eq. G-58)

4. The thrust minus axial force coefficient is

$$C(F - A) = -CA1$$

(Same as Eq. G-41)

5. The thrust minus drag coefficient is

$$C(F - D) = -CDS1$$

(Same as Eq. G-42)

6. The ratio of thrust minus axial force to ideal thrust is

$$(F - A)/FI = C(F - A)/CFI$$

(Same as Eq. G-43)

7. The ratio of thrust minus drag to ideal thrust is

$$(F - D)/FI = C(F - D)/CFI$$

(Same as Eq. G-44)

8. The thrust minus nozzle drag coefficient is

$$C(F - DNOZ) = C(F - D) + CDS2$$

(Eq. G-63)

9. The jet axial force coefficient is

$$CFJ = C(F - DNOZ) + (CDFNOZ + CDBUN)$$

(Eq. G-64)

10. The jet normal force coefficient is

$$CNJ = CN1 - CN2 - CNBUN$$

(Eq. G-65)

11. The jet pitching moment coefficient is

$$CMJ = CMY1 - CMY2 - CPMBUN$$

(Eq. G-66)

12. The resultant thrust coefficient about the pitch axis is

$$CT = \sqrt{CFJ^2 + CNJ^2}$$

(Same as Eq. G-54)

13. The thrust vector angle about the pitch axis is

$$DELTA = TAN^{-1}\ (CNJ/CFJ)$$

(Same as Eq. G-55)

14. The jet reaction lift coefficient is

$$CLJET = CT\ [SIN(ALPHA + DELTA)]$$

(Same as Eq. G-61)

15. The jet reaction axial force coefficient is

$$CFJET = CT\ [COS(ALPHA + DELTA)]$$

(Same as Eq. G-62)

I. <u>Two-Balance/Afterbody Metric IFAFN1 = 1</u>

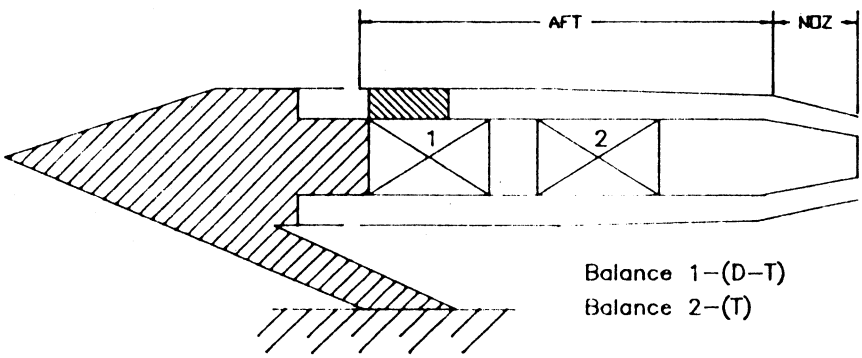

1. The jet axial force coefficient is

$$CFJ = -CA2$$

(Eq. G-67)

2. The jet normal force coefficient is

$$CNJ = CN2$$

(Eq. G-68)

3. The jet pitching moment coefficient is

$$CMJ = CMY2$$

(Eq. G-69)

4. The resultant thrust coefficient about the pitch axis is

$$CT = \sqrt{CFJ^2 + CNJ^2}$$

(Same as Eq. G-54)

5. The thrust vector angle about the pitch axis is

$$DELTA = TAN^{-1}\ (CNJ/CFJ)$$

(Same as Eq. G-55)

6. The jet reaction lift coefficient is

$$CLJET = CT\ [SIN(ALPHA + DELTA)]$$

(Same as Eq. G-61)

7. The jet reaction axial force coefficient is

$$CFJET = CT\ [COS(ALPHA + DELTA)]$$

(Same as Eq. G-62)

8. The thrust minus axial force coefficient is

$$C(F - A) = -CA1$$

(Same as Eq. G-41)

9. The thrust minus drag coefficient is

$$C(F - D) = -CDS1$$

(Same as Eq. G-42)

10. The ratio of thrust minus axial force to ideal thrust is

$$(F - A)/FI = C(F - A)/CFI$$

(Same as Eq. G-43)

11. The ratio of thrust minus drag to ideal thrust is

$$(F - D)/FI = C(F - D)/CFI$$

(Same as Eq. G-44)

12. The thrust removed lift coefficient is

$$CLAERO = CLS1 - CLS2$$

(Eq. G-70)

13. The thrust removed drag coefficient is

$$CDAERO = CDS1 - CDS2$$

(Eq. G-71)

14. The thrust removed pitching moment coefficient is

$$CMAERO = CMYS1 - CMYS2$$

(Eq. G-72)

15. The thrust minus nozzle drag coefficient is

$$C(F - DNOZ) = C(F - D) + (CDFAFT - CDFNOZ) + CDSUN$$

(Same as Eq. G-59)

J. <u>Two-Balance/Afterbody Metric IFAFN2 = 1</u>

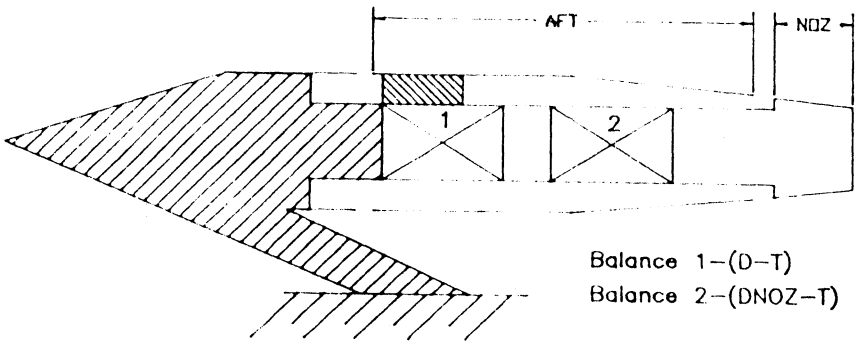

1. The jet axial force coefficient is

$$CFJ = (CDFNOZ + CFBUN) - CA2$$

(Eq. G-73)

2. The jet normal force coefficient is

$$CNJ = CN2 - CNBUN$$

(Eq. G-74)

3. The jet pitching moment coefficient is

$$CMJ = CMY2 - CPMBUN$$

(Eq. G-75)

4. The resultant thrust coefficient about the pitch axis is

$$CT = \sqrt{CFJ^2 + CNJ^2}$$

(Same as Eq. G-54)

5. The thrust vector about the pitch axis is

$$DELTA = TAN^{-1}\ (CNJ/CFJ)$$

(Same as Eq. G-55)

6. The jet reaction lift coefficient is

$$CLJET = CT * [SIN(ALPHA + DELTA)]$$

(Same as Eq. G-61)

7. The jet reaction axial force coefficient is

$$CFJET = CT * [COS(ALPHA + DELTA)]$$

(Same as Eq. G-62)

8. The thrust minus axial force coefficient is

$$C(F - A) = -CA1$$

(Same as Eq. G-41)

9. The thrust minus drag coefficient is

$$C(F - D) = -CDS1$$

(Same as Eq. G-42)

10. The ratio of thrust minus axial force to ideal thrust is

$$(F - A)/FI = C(F - A)/CFI$$

(Same as Eq. G-43)

11. The ratio of thrust minus drag to ideal thrust is

$$(F - D)/FI = C(F - D)/CFI$$

(Same as Eq. G-44)

12. The thrust removed lift coefficient is

$$CLAERO = CLS1 - CLS2$$

(Same as Eq. G-70)

13. The thrust removed drag coefficient is

$$CDAERO = CDS1 - CDS2$$

(Same as Eq. G-71)

14. The thrust removed pitching moment coefficient is

$$CMAERO = CMYS1 - CMYS2$$

(Same as Eq. G-72)

15. The thrust minus nozzle drag coefficient is

$$C\,(F - DNOZ) = -CDS2$$

(Eq. G-76)

K. <u>Single Balance, Thrust Removal All Components IFAF = 1</u>

1. The thrust removed normal force coefficient is

$$CNAERO = CN1 - CNJC$$

(Eq. G-77)

2. The thrust removed axial force coefficient is

$$CAAERO = CA1 + CFJC$$

(Eq. G-78)

3. The thrust removed pitching moment coefficient is

$$CMAERO = CMY1 - CMJC$$

(Eq. G-79)

4. The thrust removed rolling moment coefficient is

$$CRAERO = CMX1 - CRJC$$

(Eq. G-80)

5. The thrust removed yawing moment coefficient is

$$CYAERO = CMZ1 - CYJC$$

(Eq. G-81)

6. The thrust removed side force coefficient is

$$CSAERO = CY1 - CSJC$$

(Eq. G-82)

7. The thrust removed lift coefficient is

$$CLAERO = CNAERO * COS(ALPHA) - CAAERO * SIN(ALPHA)$$

(Eq. G-83)

8. The thrust removed drag coefficient is

$$CDAERO = CAAERO * COS(ALPHA) + CNAERO * SIN(ALPHA)$$

(Eq. G-84)

9. The resultant thrust coefficient about the pitch axis is

$$CT = \sqrt{CNJC^2 + CFJC^2}$$

(Same as Eq. G-34)

10. The thrust vector angle about the pitch axis is

$$DELTA = TAN^{-1}\ (CNJC/CFJC)$$

(Same as Eq. G-35)

11. The jet reaction lift coefficient is

$$CLJET = CNJC * COS(ALPHA) + CFJC * SIN(ALPHA)$$

(Eq. G-85)

12. The jet reaction axial force coefficient is

$$CFJET = CFJC * COS(ALPHA) - CNJC * (ALPHA)$$

(Eq. G-86)

13. The jet reaction side force coefficient is

$$CSJET = CSJC$$

(Eq. G-87)

14. The jet reaction pitching moment coefficient is

$$CMJET = CMJC$$

(Eq. G-88)

15. The jet reaction rolling moment coefficient is

$$CRJET = CRJC * COS(ALPHA) + CYJC * SIN(ALPHA)$$

(Eq. G-89)

16. The jet reaction yawing moment coefficient is

$$CYJET = CYJC * COS(ALPHA) - CRJC * SIN(ALPHA)$$

(Eq. G-90)

17. The splay angle is

$$SPLAY1 = TAN^{-1} (CSJC/CNJC)$$

(Eq. G-91)

18. The thrust minus axial force coefficient is

$$C(F - A) = -CA1$$

(Same as Eq. G-41)

19. The thrust minus drag coefficient is

$$C(F - D) = -CDS1$$

(Same as Eq. G-42)

20. The ratio of thrust minus axial force to ideal thrust is

$$(F - A)/FI + C(F - A)/CFI$$

(Eq. G-92)

21. The ratio of thrust minus drag to the ideal thrust is

$$(F - D)/FI = C(F - D)/CFI$$

(Eq. G-93)

22. The ratio of thrust to the ideal thrust is

$$F/FI = CFJC/CFI$$

(Same as Eq. G-45)

23. The resultant thrust coefficient about the yaw axis is

$$CTY = \sqrt{CSJC^2 + CFJC^2}$$

(Eq. G-94)

24. The thrust vector angle about the yaw axis is

$$DELTAY = TAN^{-1} (CSJC/CFJC)$$

(Eq. G-95)

25. The total resultant thrust coefficient is

$$CTT = \sqrt{CNJC^2 + CFJC^2 + CSJC^2}$$

(Eq. G-96)

26. The total resultant thrust ratio is

$$FT/FI = CTT/CFI$$

(Eq. G-97)

27. The thrust minus nozzle axial force coefficient is

$$C(F - ANOZ) = C(F - A) + (CDFAFT - CDFNOZ) + CFSUN)$$

(Eq. G-98)

28. The ratio of thrust minus nozzle axial force to the ideal thrust is

$$F - ANOZ/FI = C(F - ANOZ)/CFI$$

(Eq. G-99)

29. The thrust minus nozzle drag coefficient is

$$C(F - DNOZ) = C(F - D) + (CDFAFT - CDFNOZ) + CDSUN$$

(Same as Eq. G-59)

30. The nozzle drag coefficient is

$$CDNOZ = CDAERO - (CDFAFT - CDFNOZ) - CDSUN$$

(Eq. G-100)

31. The ratio of thrust minus nozzle drag to the ideal thrust is

$$(F - DNOZ)/FI = C(F - DNOZ)/CFI$$

(Same as Eq. G-49)

32. The thrust coefficient (from balance and pressures) is

$$CF = (F - ANOZ) + CDFNOZ + CFBUN$$

(Eq. G-101)

33. The ratio of thrust (from balance and pressures) to the ideal thrust is

$$CF/CFI = CF/CFI$$

(Eq. G-102)

L. <u>When IFAFN = 1</u>

1. The thrust removed stability axis lift coefficient is

$$CLSAER = CLAERO$$

(Eq. G-103)

2. The thrust removed stability axis drag coefficient is

$$CDSAER = CDAERO$$

(Eq. G-104)

3. The thrust removed stability axis side force coefficient is

$$CSSAER = CSAERO$$

(Eq. G-105)

4. The thrust removed stability axis pitching moment coefficient is

$$CMSAER = CMAERO$$

(Eq. G-106)

5. The thrust removed stability axis rolling moment coefficient is

$$CRSAER = CRAERO * [COS(ALPHA)] + CYAERO * [SIN (ALPHA)]$$

(Eq. G-107)

6. The thrust removed stability axis yawing moment coefficient is

$$CYSAER = CYAERO * [COS(ALPHA)] - CRAERO * [SIN (ALPHA)]$$

(Eq. G-108)

7. The thrust removed wind axis drag coefficient is

$$CDWAER = CDSAER * COS(BETA) - CSSAER * SIN (BETA)$$

(Eq. G-109)

8. The thrust removed wind axis side force coefficient is

$$CSWAER = CSSAER * COS(BETA) + CDSAER * SIN (BETA)$$

(Eq. G-110)

9. The thrust removed wind axis lift coefficient is

$$CLWAER = CLSAER$$

(Eq. G-111)

10. The thrust removed wind axis rolling moment coefficient is

$$CRWAER = CRSAER * COS(BETA) + CMSAER * SIN (BETA)$$

(Eq. G-112)

11. The thrust removed wind axis pitching moment coefficient is

$$CMWAER = CMSAER * COS(BETA) - CRSAER * SIN (BETA)$$

(Eq. G-113)

12. The thrust removed wind axis yawing moment coefficient is

$$CYWAER = CYSAER$$

(Eq. G-114)

M. <u>Bifurcate Support Mode Two Balance/Afterbody Metric IDN = 1</u>

1. The axial force coefficient is modified

$$CA1 = CA1 - 0.0004$$

(Eq. G-115)

2. The drag coefficient in the stability axis is modified

$$CDS1 = CDS1 - 0.0004$$

(Eq.G-116)

3. The thrust removed normal force coefficient is

$$CNAERO = CN1 - CNJC$$

(Same as Eq. G-77)

4. The thrust removed axial force coefficient is

$$CAAERO = CA1 + CFJC$$

(Same as Eq. G-78)

5. The thrust removed pitching moment coefficient is

$$CMAERO = CMY1 - CMJC$$

(Same as Eq. G-79)

6. The thrust removed rolling moment coefficient is

$$CRAERO = CMX1 - CRJC$$

(Same as Eq. G-80)

7. The thrust removed yawing moment coefficient is

$$CYAERO = CMZ1 - CYJC$$

(Same as Eq. G-81)

8. The thrust removed side force coefficient is

$$CSAERO = CY1 - CSJC$$

(Same as Eq. G-82)

9. The thrust removed lift coefficient is

$$CLAERO = CNAERO * COS(ALPHA) - CAAERO * SIN(ALPHA)$$

(Same as Eq. G-83)

10. The thrust removed drag coefficient is

$$CDAERO = CAAERO * COS(ALPHA) + CNAERO * SIN(ALPHA)$$

(Same as Eq. G-84)

11. The computed resultant thrust about the pitch axis is

$$CT = \sqrt{CNJC^2 + CFJC^2}$$

(Same as Eq. G-34)

12. The computed thrust vector angle about the pitch axis is

$$DELTA = TAN^{-1} (CNJC/CFJC)$$

(Same as Eq. G-35)

13. The jet reaction lift coefficient is

$$CLJET = CT [SIN (ALPHA + DELTA)]$$

(Same as Eq. G-36)

14. The jet reaction axial force coefficient is

$$CFJET = CT [COS (ALPHA + DELTA)]$$

(Same as Eq. G-37)

15. The thrust minus axial force coefficient is

$$C\,(F - A) = -CA1$$

(Same as Eq. G-41)

16. The thrust minus drag coefficient is

$$C(F - D) = -CDS1$$

(Same as Eq. G-42)

17. The ratio of thrust minus axial force to ideal thrust is

$$(F - A)/FI = C(F - A)/CFI$$

(Same as Eq. G-43)

18. The ratio of thrust minus drag to ideal thrust is

$$(F - D)/FI = C(F - D)/CFI$$

(Same as Eq.G-44)

19. The ratio of thrust to ideal thrust is

$$F/FI = CFJC/CFI$$

(Same as Eq. G-45)

20. The computed resultant thrust coefficient about the yaw axis is

$$CT = \sqrt{CSJC^2 + CFJC^2}$$

(Same as Eq. G-94)

21. The computed thrust vector angle about the yaw axis is

$$DELTAY = TAN^{-1} (CSJC/CFJC)$$

(Same as Eq. G-95)

22. The computed resultant thrust coefficient is

$$CTT = \sqrt{CNJC^2 + CFJC^2 + CSJC^2}$$

(Same as Eq. G-96)

23. The total resultant thrust ratio is

$$FT/FI = CTT/CFI$$

(Same as Eq. G-97)

24. The thrust minus nozzle drag coefficient is

$$C\ (D - FNOZ)/FI = CDS2 - CDS1$$

(Eq. G-117)

25. The ratio of thrust minus nozzle drag to ideal thrust is

$$(F - FNOZ)/FI = C\ (D - FNOZ)/CFI$$

(Eq. G-118)

26. The nozzle lift plus thrust coefficient is

$$CLNOZT = CLS1 - CLS2$$

(Eq. G-119)

27. The nozzle pitching moment plus lift coefficient is

$$CMNOZT = CMYS1 - CMYS2$$

(Eq. G-120)

28. The nozzle drag coefficient is

$$CDNOZ = CDAERO - CDS2$$

(Eq. G-121)

29. The thrust removed nozzle lift coefficient is

$$CLNOZ = CLAERO - CLS2$$

(Eq. G-122)

30. The thrust removed nozzle pitching moment coefficient is

$$CMNOZ = CMAERO - CMYS2$$

(Eq. G-123)

N. <u>Other Options</u>

1. ID - Engineer's option

a. If ID = 1, the engineer may write his own option with the following restrictions:

(1) Names must be identical to those already used.

(2) No more terms may be added to the output.

APPENDIX H

APPENDIX H

Turboprop Options

MODULE H TURBOPROP OPTIONS

SYMBOL	NOMENCLATURE
AD(J)	Area at rake in exhaust duct J, sq. in.
AE(J)	Exhaust area for exhaust duct J, sq. in.
ALPHAP(J)	Angle of attack at propeller J, degrees.
ARATIO(J)	Area ratio for motor J.
AT(J)	Throat area of exhaust duct J, sq. in.
CDP(J)	Propeller drag coefficient for motor J.
CDTP	Total propeller drag coefficient.
CE	Exhaust sonic velocity, feet per second.
CO	Sonic velocity, feet per second.
CHPROP(J)	Chord length at 75 percent radius of propeller J.
CMPROP(J)	Pitching moment coefficient of propeller J.
CNPROP(J)	Normal force coefficient of propeller J.
CPPROP(J)	Power coefficient of propeller J.
CTPROP(J)	Thrust coefficient of propeller J.
DIAP(J)	Diameter of propeller J, feet.
ETA(J)	Efficiency for motor J, per cent.
ETAP(J)	Efficiency for propeller J, per cent.
FAPT	Total system thrust in streamwise direction, lbs.
FNPT	Total propeller normal force coefficient.
FTE(J)	Propeller thrust plus jet thrust due to exhaust flow for motor J, lbs.
FTGE(J)	Total system thrust of motor J, lbs.
JP(J)	Advance ratio of propeller J.

SYMBOL	NOMENCLATURE
KPINM(I,J)	Constant for input drive pressure tap I and motor J, (must be 0.0 or 1.0).
KPOUTM(I,J)	Constant for output drive pressure tap I and motor J, (must be 0.0 or 1.0).
KPST(I,J)	Constant for rake static pressure tap I and motor J, (must be 0.0 or 1.0).
KPW	Power coefficient constant.
KTINM(I,J)	Constant for input motor temperature tap I and motor J, (must be 0.0 or 1.0).
KTOUTM(I,J)	Constant for output motor temperature tap I and motor J, (must be 0.0 or 1.0).
MD(J)	Rake mach number for motor J.
ME(J)	Exhaust mach number for motor J.
MTIP(J)	Mach number of propeller tip J.
MYPT	Total propeller pitching moment.
NPROP(J)	Revolutions per second of propeller J.
NSAME(J)	Constant of propeller J set equal to 0.0 or 1.0.
PDRIVE	Pressure drop through air turbine motor, lbs/sq. in.
PE(J)	Exhaust static pressure for motor J, lbs/sq. in.
PHIANG	Angle between forward and rotational velocities, degrees.
PINM(I,J)	Motor input static pressure for motor J and pressure tap I, lbs/sq. in.
PITCH(J)	Measured value of geometric pitch of propeller J.
POUTM(I,J)	Motor output static pressure for motor J and pressure tap I, lbs/sq. in.
PR/PTR	Ratio of static to total pressures.
PST(I,J)	Static pressure for motor J and pressure tap I at rake, lbs/sq. in.

SYMBOL	NOMENCLATURE
PSTATC(J)	Average static pressure at rake for motor J, lbs/sq. in.
PW1(J)	Horsepower output by motor J with ideal gas calculations, HP.
PW2(J)	Horsepower calculated using Isentropic equation multiplied by efficiency for motor J, HP.
RHO	Density of free-stream air, slugs per cubic feet.
RPS	Engine's revolutions per second.
TDRIVE(J)	Temperature differential across the air turbine motor J, °F.
TE(J)	Exhaust temperature for motor J, °F.
TINM(I,J)	Input temperature for motor J and temperature tap I, °F.
TOUTM(I,J)	Output temperature for motor J and temperature tap I, °F.
TSPROP(J)	Rotational tip speed of propeller J, feet per second.
TO	Tunnel static temperature, °R.
VE(J)	Exhaust velocity in motor J, feet per second.
VIS	Free-stream air viscosity based on tunnel air static temperature, lbs., sec./sq. ft.
VO	Free-stream velocity, feet per second.
VRES(J)	Total velocity of propeller tip J, feet per second.
VRN	Total velocity at 75 percent of propeller radius (for Reynolds number), feet per second.

APPENDIX H

Module H

Turboprop Options

A. Introduction

1. Module B with its constants must be run first. All constants are to be initialized to a value of zero. The project engineer must supply only those constants which are required for those quantities to be computed. In addition, by logical use of combinations of these constants, several options are available to the project engineer.

2. Set NSAME(J) = 1 if POUTM(I,J) = PST(I,J), and TOUTM(I,J) = TTJ(I,J)

   where J = engine number

   I = probe number

3. Set the constant, KTINM(I,J), equal to 1.0 for the temperature measuring probe. If the temperature probe is defective or does not exist, set the constant equal to 0.0. Use only a maximum of six probes per engine.

4. The meaning of the values of KTOUTM(I,J) is the same as KTINM(I,J).

5. Set the constant, KPINM(I,J) equal to 1.0 for the pressure measuring probe. If the probe is defective or does not exist, set the constant equal to 0.0. The pressure probes may be weighted using this constant, if desired. Use only a maximum of 12 probes per engine.

6. The meaning of the values of KPOUTM(I,J) is the same as KPINM(I,J).

7. Set the constant, KPST(I,J), equal to 1.0 for the pressure measuring probe. If the probe is defective or does not exist, set the constant equal to 0.0. The pressure probes may be weighted using this constant, if desired. Use only a maximum of 12 probes per engine.

8. AE(J) is equal to AT(J) for a converging nozzle. Both constants are required. Values of AT(J) come from Module B.

B. <u>Test for Air Turbine Simulator</u>

1. The constant required from the project engineer input at Module B is NUMENG (0 to 4).

   If NUMENG = 0, skip module H.

C. <u>Compute Common Constant</u>

1. The constants required from the project engineer input at Module B are GAMJ and RJ.

$$KJ1 = \left(\frac{2}{GAMJ+1}\right)^{\frac{GAMJ+1}{2(GAMJ-1)}} \sqrt{\frac{GAMJ * 32.174}{RJ}}$$

(Same as Eq. B-1)

$$KJ2 = \frac{GAMJ * 64.348}{(GAMJ-1)RJ}$$

(Same as Eq. B-2)

$$KJ3 = \sqrt{\frac{2(GAMJ)(RJ)}{(GAMJ-1)32.174}}$$

(Same as Eq. B-3)

$$KJ4 = \frac{GAMJ - 1}{GAMJ}$$

(Same as Eq. B-4)

$$KJ5 = \frac{1}{GAMJ}$$

(Same as Eq. B-5)

2. To continue, the equations are given to show calculations for other constants.

   a. The static temperature is

$$TO = (TTO + 459.67)/(1.0 + 0.2 * MACH^2)$$

(Eq. H-1)

   b. The free-stream density is

$$RHO = PO * 144.0/(1716.4829 * TO)$$

(Eq. H-2)

   c. The viscosity is

$$VIS = 2.270 * 10^{-8} * TO * \sqrt{TO / (TO + 198.6)}$$

(Eq. H-3)

   d. The free-stream velocity of sound is

$$CO = 49.021179 * \sqrt{TO}$$

(Eq. H-4)

e. The free-stream velocity is

$$VO = CO * MACH$$

(Eq. H-5)

D. Individual Engine Measurements

1. This module provides the computations for four separate engines with the following instrumentation in each engine.

   a. Input pressure to engine

   *b. Output pressure of engine

   c. Input temperature to engine

   *d. Output temperature of engine

   e. Static exhaust pressure at rake

   f. Revolutions per second indicator

   g. Geometric pitch of propeller

E. Propeller Coefficient Calculations

1. The tip speed of propeller is

$$TSPROP(J) = 3.14159 * DIAP(J) * NPROP(J)$$

(Eq. H-6)

2. The advance ratio of propeller is

$$JP(J) = VO/(NPROP(J) * DIAP(J))$$

(Eq. H-7)

---

* May be replaced with rake measurements.

3. The angle of attack of the propeller is the geometric pitch of the propeller at the 3/4 chord, in degrees, minus the resultant angle between the free-stream velocity and rotational velocity.

$$ALPHAP(J) = PITCH(J) - PHIANG$$

(Eq. H-8)

where

$$PHIANG = TAN^{-1}\ (VO/VROT)$$

(Eq. H-9)

and

$$VROT = (3/4)\ TSPROP(J)$$

(Eq. H-10)

4. The Reynolds number for the propeller is calculated at the 3/4 chord.

$$RNPROP(J) = VRN * RHO * CHPROP(J)/VIS$$

(Eq. H-11)

where

VRN = Resultant velocity at the 3/4 chord

$$= \sqrt{\left(VROT^2 + VO^2\right)}$$

VIS = Free-stream air viscosity calculated by Ames table equation, based on tunnel air static temperature

5. The Mach number of the propeller tip is

$$MTIP(J) = VRES/CO$$

(Eq. H-12)

where

$$VRES = \sqrt{VO^2 + TSPROP(J)^2}$$

(Eq. H-13)

6. Calculate the thrust coefficient of the propeller and hub using

$$SCALE = RHO * NPROP(J)^2 * DIAP(J)^4$$

(Eq. H-14)

$$CTPROP(J) = FAREF1/SCALE$$

(Eq. H-15)

where

FAREF1 comes from Equation D-76 for J + 1 balances

7. Calculate the normal force coefficient of the propeller and hub using

$$CNPROP(J) = FNREF1/SCALE$$

(Eq. H-16)

where

FNREF1 comes from Equation D-76 for J + 1 balances

8. Calculated the pitching moment coefficient of the propeller and hub using

$$CMPROP(J) = MYREF1/(SCALE * DIAP(J) * 12.0)$$

(Eq. H-17)

where

MYREF1 comes from Equation D-76 for J + 1 balances

9. If NSAME(J) equals 1, then

$$POUTM(I,J) = PST(I,J)$$

(Eq. H-18)

and

$$TOUTM(I,J) = TTJ(I,J)$$

(Eq. H-19)

10. Calculations for the power coefficient of the propeller and hub are:

a. Turbine inlet temperature

$$TIN(J) = \frac{\sum TTNM(I,J) * KTINM(I,J)}{\sum KTINM(I,J)}$$

(Eq. H-20)

b. Turbine outlet temperature

$$TOUT(J) = \frac{\sum TOUTM(I,J) * KTOUTM(I,J)}{\sum KTOUTM(I,J)}$$

(Eq. H-21)

c. Turbine inlet pressure

$$PIN(J) = \frac{\sum PINM(I,J) * KPINM(I,J)}{\sum KPINM(I,J)}$$

(Eq. H-22)

d. Turbine outlet pressure

$$POUT(J) = \frac{\sum POUTM(I,J) * KPOUTM(I,J)}{\sum KOUTM(I,J)}$$

(Eq. H-23)

e. The drive pressure across the air turbine engine is

$$PDRIVE(J) = PIN(J) - POUT(J)$$

(Eq. H-24)

f. The drive temperature across the air turbine engine is

$$TDRIVE(J) = TIN(J) - TOUT(J)$$

(Eq. H-25)

g. The engine's revolutions per second are

$$RPS = NPROP(J) / \sqrt{(TIN(J) + 459.67) / 518.7}$$

(Eq. H-26)

h. Calculate the horsepower output from the air turbine engine using

$$PW1(J) = (6006.0 * (WPENG(J)/32.174) * TDRIVE(J)/550) * ((KPW13 * PIN(J) + KPW12 * RPS + KPW11) * RPS + KPW10)$$

(Eq. H-27)

$$PW2(J) = (6006.0 * (WPENG(J)/32.174) * (TIN(J) + 459.67)$$

$* (1.0 - (POUT(J)/PIN(J))^{2/7})$

$* ETA(J)/550$

(Eq. H-28)

where

ETA(J) is determined by linear interpolation from a table.

i. The power coefficient of the propeller and hub is

$$CPPROP(J) = PW/(RHO * NPROP(J)^3 * DIAP(J)^5)$$

$$PW = PW2(J) \text{ IF } KPW = 0$$

$$PW = PW1(J) \text{ IF } KPW = 1$$

(Eq. H-29)

j. The propeller efficiency is

$$ETAP(J) = CTPROP(J) * JP(J)/CPROP(J)$$

(Eq. H-30)

F. <u>Exhaust Calculations</u>

1. Calculate the exhaust duct Mach number (rake position) using

a. Duct static pressure

$$PSTATIC(J) = \frac{\sum PST(I,J) * KPST(I,J)}{\sum KPST(I,J)}$$

(Eq. H-31)

b. The pressure ratio at the duct rake is

$$PR/PTR(J) = PSTATIC(J)/PTENG(J)$$

(Eq. H-32)

c. If PR/PTR(J) = PSTATIC(J) < 0.5283, use the Newton Raphson method for MD(J).

$$MD(J) = \sqrt{\frac{5}{6} * \left(\frac{7 * MD(J)^2 - 1}{6}\right)^{5/7} * \left(\frac{PR}{PTR(J)}\right)^{-2/7}}$$

(Eq. H-33)

d. If PR/PTR(J) > 0.5283, use this calculation of subsonic duct Mach numbers for MD(J).

$$MD(J) = \sqrt{5 * (PR / PTR(J))^{-2/7} - 5}$$

(Eq. H-34)

2. The ratio of A* to Area at the rake position and at the exit is

a. Calculate A*/A at the rake station using

$$ASTR / A = (1.728 * MD(J)) * \left(1 + \frac{MD(J)^2}{5}\right)^{-3}$$

(Eq. H-35)

b. Calculate A*/A of the exhaust exit using

$$ARATIO(J) = ASTR/A * AD(J)/AE(J)$$

(Eq. H-36)

3. Calculate the exhaust Mach number at the exit using an iteration technique on the formula

$$ME(J) = \frac{125}{216} * (ARATIO(J)) * \left(1 + \frac{ME(J)^2}{5}\right)^{+3}$$

(Eq. H-37)

4. The exhaust static temperature calculation is

$$TE = (TTENG(J) + 459.67) * \left(1.0 + \frac{ME(J)^2}{5}\right)^{-1}$$

(Eq. H-38)

where

TTENG(J) comes from Equation B-9.

5. The exhaust sonic velocity is

$$CE = 49.021179 * \sqrt{TE}$$

(Eq. H-39)

6. The exhaust velocity is

$$VE(J) = ME(J) * CE$$

(Eq. H-40)

7. The exhaust static pressure is

$$PE(J) = PTENG(J) * \left(1 + \frac{ME(J)^2}{5}\right)^{-7/2}$$

(Eq. H-41)

8. The total propeller pitching moment is

$$MYPT = \Sigma\ MY_i$$

(Eq. H-42)

9. The total propeller normal force is

$$FNPT = \sum_{i=1}^{NUMENG} NF_i$$

(Eq. H-43)

10. The total propeller axial force is

$$FAPT = \sum_{i=1} AF_i$$

(Eq. H-44)

11. The axial force coefficient in the body axis with propeller and jet thrust removed is

$$CAPRS = CAAERO + FAPT$$

(Eq. H-45)

12. The drag coefficient in the stability axis with propeller and jet thrust removed is

$$CDPRS = CAPRS\ [COS\ (ALPHA)] + CNAERO\ \{SIN\ (ALPHA)]$$

(Eq. H-46)

13. The side force coefficient in the stability axis with propeller and jet thrust removed is

$$CSPRS = CSAERO$$

(Eq. H-47)

14. The lift coefficient in the stability axis with propeller and jet thrust removed is

$$CLPRS = CNAERO\ [COS\ (ALPHA)] - CAPRS\ [SIN\ (ALPHA)]$$

(Eq. H-48)

15. The rolling moment coefficient in the stability axis with propeller and jet thrust removed is

$$CRPRS = CRAERO\ [COS\ (ALPHA)] + CYAERO\ [SIN\ (ALPHA)]$$

(Eq. H-49)

16. The pitching moment coefficient in the stability axis with propeller and jet exhaust removed is

$$CMPRS = CMAERO$$

(Eq. H-50)

17. The yawing moment coefficient in the stability axis with propeller and jet exhaust thrust removed is

$$CYPRS = CYAERO\ [COS\ (ALPHA)] - CRAERO\ [SIN\ (ALPHA)]$$

(Eq. H-51)

18. The drag coefficient in the wind axis with propeller and jet thrust removed is

$$CDPRW = CDPRS\ [COS\ (BETA)] - CSPRS\ [SIN\ (BETA)]$$

(Eq. H-52)

19. The side force coefficient in the wind axis with propeller and jet thrust removed is

$$CDPRW = CSPRS\ [COS\ (BETA)] + CDPRS\ [SIN\ (BETA)]$$

(Eq. H-53)

20. The lift coefficient in the wind axis with propeller and jet exhaust thrust removed is

$$CLPRW = CLPRS$$

(Eq. H-54)

21. The rolling moment coefficient in the wind axis with propeller and jet exhaust thrust removed is

$$CRPRW = CRPRS\ [COS\ (BETA)] + CMPRS\ [SIN\ (BETA)]$$

(Eq. H-55)

22. The pitching moment coefficient in the wind axis with propeller and jet exhaust thrust removed is

$$CMPRW = CMPRS\ [COS\ (BETA)] - CRPRS\ [SIN\ (BETA)]$$

(Eq. H-56)

23. The yawing moment coefficient in the wind axis with propeller and jet exhaust thrust removed is

$$CYPRW = CYPRS$$

(Eq. H-57)

APPENDIX I

APPENDIX I

Module I

Inlet Distortion

SYMBOL	NOMENCLATURE
ADBPS(J)	Inlet bypass flow controller steady state distortion, where J = 1 for left engine and J = 2 for right engine.
ADPS(J)	Inlet engine face static pressure distortion, where J = 1 for left engine and J = 2 for right engine.
AFBSD(J)	Engine bypass controller steady state distortion, where J = 1 for left engine and J = 2 for right engine.
AFSD(J)	Engine face steady state distortion index, where J = 1 for left engine and J = 2 for right engine.
AMFD(J)	Inlet mass flow plug choked flow effective area, sq. in., where J = 1 for left engine and J = 2 for right engine.
AMFDB(J)	Engine bypass controller plug choked flow effective area, sq in., where J = 1 for left engine and J = 2 for right engine.
APBR(J)	Engine bypass controller plug effective area, sq. in., where J = left engine and J = 2 for right engine.
APR(J)	Mass flow plug effective area, sq. in., where J = 1 for left engine and J = 2 for right engine.
ARXT(J)(N)	Engine area of extent, sq. in., where J = 1 is left engine, J = 2 is right engine, and N is the ring number.
AS(J)	Engine face Mach number, where J = 1 for left engine and J = 2 for right engine.
ASB(J)	Bypass instrumentation plane Mach number, where J = 1 for left engine and J = 2 for right engine.
CAEFT	Total engine face axial force coefficient, CAEF1+CAEF2.
CAEF(J)	Engine face axial force coefficient, where J = 1 is left engine J = 2 is right engine.

SYMBOL	NOMENCLATURE
C(M)	Constants to be used in mass flow/weight flow calculation. Where M is the constant number, M=1 to 25 for the left engine; M=26 to 50 for the right engine; M=51 to 56 choked flow for the left engine; M=57 to 62 choked flow for the right engine.
CB(M)	Constants to be used for bleed weight flow calculation. Five for each bleed with a maximum of 12 bleeds per engine, where M = 1 to 60 for the left engine and 61 to 120 for the right engine.
CE(M)	Constants to be used in mass flow/weight flow calculation for a bypass controller. Where M is the constant number, M=1 to 25 for the left engine; M=26 to 50 for the right engine; M=51 to 56 choked flow for the left engine; M=57 to 62 choked flow for the right engine.
C(I)(M)	Constants for computing bleed mass flow, where I is bleed number and M is a constant number of 1 to 5 for each bleed.
DCI(J)(N)	Inlet circumferential distortion intensity, where J = 1 is left engine, J = 2 is right engine, and N is the ring number
DPRS(J)	Engine loss in surge pressure ratio, where J = 1 for left engine and J = 2 for right engine.
DRI(J)(N)	Engine radial distortion intensity, where J = 1 for left engine, J = 2 for right engine, and N is ring number.
EXT(J)(N)	Engine theta value of extent, where J = 1 for left engine, J = 2 for right engine, and N is ring number.
KC(N)	Engine circumferential distortion constant, where N is ring number.
KR(N)	Engine radial distortion constant, where N is ring number.

SYMBOL	NOMENCLATURE
K(N)	Engine constant, where N is ring number.
KERAK(L)	Constant used to compute engine face static pressure, where L is tap number; default is 0.0.
KEXIT(L)	Constant used to compute flow plug exit static pressures, where L is tap number; default is 0.0.
KPPBS(L)	Constant used to compute bypass flow plug exit static pressure, where L is tap number; default is 0.0.
KPPBT(L)	Constant used to compute bypass flow plug exit total pressure, where L is probe number; default is 0.0.
KPPT(L)	Constant used to compute flow plug exit total pressure, where L is probe number; default is 0.0.
KPRMS(L)	Constant used to compute flow RMS pressure, where L is probe number; default is 0.0.
KPSB(L)	Constant used to compute bleed flow exit static pressure, where L is tap number; default is 0.0.
KPTB(L)	Constant used to compute bleed flow exit total pressure, where L is probe number; default is 0.0.
KPTRK(L)	Constant used to compute bypass instrumentation plane total pressure, where L is probe number; default is 0.0.
KTERK(L)	Constant used to compute engine face total pressure, where L is probe number; default is 0.0.
KTTB(J)(L)	Constant used to compute bypass flow plug exit total temperature, where L is probe number; default is 0.0 : where J = 1 for left engine and J = 2 for right engine.

SYMBOL	NOMENCLATURE
KTTP(L)	Constant used to compute flow plug exit total temperature, where L is probe number; default is 0.0.
MFLB	Bypass controller flow calculation flag, where 0 = no bypass flow, 1 = mass flow computation, and 2 = weight flow computation.
MFLO	Inlet flow calculation flag, where 0 = weight flow and 1 = mass flow.
M/MOB(J)(I)	Bleed mass flow ratio, where J = 1 for left engine, J = 2 for right engine, and I is bleed number.
M/MOBI(J)	Bypass flow plug mass flow ratio based on instrumentation plane pressure ratio, where J = 1 for left engine and J = 2 for right engine.
M/MOBP(J)	Bypass flow plug nozzle mass flow ratio, where J = 1 for left engine and J = 2 for right engine.
M/MOI(J)	Engine mass flow ratio based on engine face pressure ratio, where J = 1 for left engine and J = 2 for right engine.
M/MOP(J)	Inlet mass flow plug nozzle mass flow ratio, where J = 1 for left engine and J = 2 for right engine.
M/MOT(J)	Inlet total mass flow ratio, where J = 1 for left engine and J = 2 for right engine.
MPR(J)(N)	Engine multiples per revolution, where J = 1 for left engine, J = 2 for right engine, and N is ring number.
NBLD(J)	Number of bleeds in engine, where J = 1 for left engine and J = 2 for right engine.
NBS(J)(I)	Number of static pressures in engine bleed, where J = 1 for left engine, J = 2 for right engine, and I is the bleed number.

SYMBOL	NOMENCLATURE
NBT(J)(I)	Number of total pressures in engine bleed, where J = 1 for left engine, J = 2 for right engine, I is the bleed number.
NPPBS(J)	Number of bypass flow plug exit static pressures, where J = 1 for left engine and J = 2 for right engine.
NPPBT(J)	Number of bypass flow plug exit total pressures, where J = 1 for left engine and J = 2 for right engine.
NPPS(J)	Number of exit static pressures on left mass flow plug rake, where J = 1 for left engine and J = 2 for right engine. NPPS1+NPPS2 maximum of 20
NPPT(J)	Number of total pressures on mass flow plug rake, where J = 1 for left engine and J = 2 for right engine. NPPT1+NPPT2 maximum of 100.
NPRING	Number of total pressures per ring at engine face.
NPRMS(J)	Number of engine face RMS pressures, where J = 1 for left engine and J = 2 for right engine. NPRMS1+NPRMS2 max of 80.
NPSEF(J)	Number of static pressures on engine face rake, where J = 1 for left engine and J = 2 for right engine. NPSEF1+NPSEF2 maximum of 80.
NPTB(J)	Number of bypass instrumentation plane total pressures, where J = 1 for left engine and J = 2 for right engine. NPTB1+NPTB2 maximum of 80.
NPTEF(J)	Number of total pressures on engine face rake, where J = 1 for left engine and J = 2 for right engine. NPTEF1+NPTEF2 maximum of 100.

SYMBOL	NOMENCLATURE
NPTT(J)	Number of total temperature probes at mass flow plug, where J = 1 for left engine and J = 2 for right engine. NPTT1+NPTT2 maximum of 12.
PAFSD(J)	Mass flow plug steady state distortion index, where J = 1 for left engine and J = 2 for right engine.
PALWR(J)(N)	Average engine face low pressure ratio used to compute distortion, where J = 1 for left engine, J = 2 for right engine, and N is ring number.
PAVR(J)(N)	Engine face average total pressure per ring, lbs./sq. in., where J = 1 for left engine, J = 2 for right engine, and N is ring number.
PB(J)(L)	Engine bleed static pressure, lbs./sq. in., where J = 1 for left engine, J = 2 for right engine, and L is the tap number.
PB(J)/ PTB(J)(I)	Ratio of average bleed static pressure to average bleed total pressure, where J = 1 for left engine, J = 2 for right engine, and I is the bleed number.
PEFRMSA(J)	Engine face average RMS pressure, lbs./sq. in., where J = 1 for left engine and J = 2 for right engine.
PEFRMS(L)	Engine face RMS pressure, lbs./sq. in., where L is probe number with a maximum of 40.
PERAKE(L)	Engine face rake static pressure, lbs./sq. in., where L is the tap number.
PEXBR(J)	Average bypass flow plug exit static pressure divided by average flow plug exit total pressure, where J = 1 for left engine and J = 2 for right engine.

SYMBOL	NOMENCLATURE
PEXIT(L)	Mass flow plug exit static pressure, lbs./sq. in., where L is tap number.
PEXTR(J)	Average flow plug exit static pressure divided by average flow plug exit total pressure, where J = 1 for left engine and J = 2 for right engine.
PFSDB(J)	Bypass flow plug steady state distortion index, where J = 1 for left engine and J = 2 for right engine.
PI(J)/PTO	Average engine face static pressure divided by freestream total pressure, where J = 1 for left engine and J = 2 for right engine.
PPBS(J)	Ratio of average bypass flow plug exit static pressure to free stream total pressure, where J = 1 for left engine and J = 2 for right engine.
PPBS(L)	Bypass flow plug exit static pressure, lbs./sq. in., where L is tap number.
PPBT(J)	Ratio of average bypass flow exit total pressure to free stream total pressure, where J = 1 for left engine and J = 2 for right engine.
PPBT(L)	Bypass flow plug exit total pressure, lbs./sq. in. where L is probe number.
PPS(J)/PTO	Average mass flow plug static pressure divided by free stream total pressure, where J = 1 for left engine and J = 2 for right engine.
PPT(L)	Mass flow plug exit total pressure, lbs./sq. in., where L is the probe number.

SYMBOL	NOMENCLATURE
PPT(J)/PTO	Average mass flow plug exit total pressure divided by freestream total pressure, where J = 1 for left engine and J = 2 for right engine.
PRMS(L)	Engine face RMS pressure, lbs./sq. in., where L is tap number
PRMS(L)/ PTI(J)	Engine face RMS pressure divided by engine face average total pressure, where J = 1 for left engine, J = 2 for right engine, and L is tap number
PSAB(J)(I)	Ratio of average engine bleed static pressure to free stream total pressure, where J = 1 for left engine, J = 2 for right engine, and I is bleed number.
PSB(L)	Engine bleed static pressure, lbs./sq. in., where L is the tap number.
PSD(J)/PTO	Average flow plug static pressure divided by free stream total pressure, where J = 1 for left engine and J = 2 for right engine.
PTAB(J)(I)	Ratio of average engine bleed total pressure to free stream total pressure, where J = 1 for left engine, J = 2 for right engine, and I is bleed number.
PTB(L)	Engine bleed total pressure, lbs./sq. in., where L is the probe number.
PTBD(J)	Ratio of average bypass instrumentation plane total pressure to free stream total pressure, where J = 1 for left engine and J = 2 for right engine.
PTERAK(L)	Engine face total pressure, lbs./sq. in., where L is the probe number.

SYMBOL	NOMENCLATURE
PTI(J)/PTO	Average engine face total pressure divided by freestream total pressure, where J = 1 for left engine and J = 2 for right engine.
PTRAKB(L)	Bypass instrumentation plane total pressure, lbs./sq. in., where L is probe number.
SAB(J)(I)	Engine bleed exit area, sq. in., where J = 1 for left engine, J = 2 for right engine, and I is bleed number.
SANF(J)	Inlet engine face annular flow area, sq. in., where J = 1 for left engine and J = 2 for right engine.
SCAP(J)	Inlet capture area, sq. in., where J = 1 for left engine and J = 2 for right engine,
SANFB(J)	Bypass annular flow area, sq. in., where J = 1 for left engine and J = 2 for right engine.
SCAPB(J)	Bypass capture area, sq. in., where J = 1 for left engine and J = 2 for right engine.
SEF(J)	Engine face area, sq. in., where J = 1 for left engine and J = 2 for right engine.
SEFB(J)	Bypass instrumentation plane area, sq. in., where J = 1 for left engine and J = 2 for right engine.
TFRMS(J)	Engine face RMS turbulence, where J = 1 for left engine and J = 2 for right engine.
TTBP(J)(L)	Bypass flow plug total temperature, °F, where J = 1 for left engine, J = 2 for right engine, and L is probe number.
TTBP(J)	Average bypass flow plug total temperature, °F, where J = 1 for left engine and J = 2 for right engine.

SYMBOL	NOMENCLATURE
TTB(J)	Bypass instrumentation plane computed total temperature, °R, where J = 1 for left engine and J = 2 for right engine.
TTE(J)	Engine face computed total temperature, °R, where J = 1 for left engine and J = 2 for right engine.
TTP(J)	Mass flow plug total temperature, °F, where J = 1 for left engine and J = 2 for right engine.
TTP(L)	Mass flow plug total temperature, °F, where L is the probe number with a maximum of 8.
WCBR(J)(I)	Inlet bleed corrected mass flow, lbs/sec, where J = 1 for left engine, J = 2 for right engine, and I is bleed number.
WCB(J)(I)	Inlet bleed corrected mass flow, lbs/sec, where J = 1 for left engine, J = 2 for right engine, and I is bleed number.
WCCR(J)	Engine face choked weight flow, lbs/sec, where J = 1 for left engine and J = 2 for right engine.
WCCBR(J)	Bypass instrumentation plane choked weight flow, lbs/sec, where J = 1 for left engine and J = 2 for right engine.
WCP(J)	Engine weight flow based on engine face pressure ratio, lbs/sec, where J = 1 for left engine and J = 2 for right engine, where J = 1 for left engine, J = 2 for right engine, and I is bleed number.
WCR(J)	Engine face corrected weight flow, lbs/sec, where J = 1 for left engine and J = 2 for right engine.
WCT(J)	Engine face total corrected weight flow, lbs/sec, where J = 1 for left engine and J = 2 for right engine.
WC/WCC(J)	Engine corrected weight flow ratio based on flow plug calibration, where J = 1 for left engine and J = 2 for right engine.

SYMBOL	NOMENCLATURE
WPB(J)(I)	Engine bleed physical weight flow, lbs/sec, where J = 1 for left engine, J = 2 for right engine, and I is bleed number.
WPT(J)	Engine face total physical airflow, lbs/sec, where J = 1 for left engine and J = 2 for right engine.
WP(J)	Engine face physical air flow, lbs/sec, where J = 1 for left engine and J = 2 for right engine.
XMBE(J)(I)	Engine bleed exit Mach number, where J = 1 for left engine, J = 2 for right engine, and I is bleed number.
XMEF(J)	Engine face Mach number, where J = 1 for left engine and J = 2 for right engine.
XMFB(J)	Bypass instrumentation plane Mach number, where J = 1 for left engine and J = 2 for right engine.
XMFP(J)	Mass flow plug nozzle mass flow function, where J = 1 for left engine and J = 2 for right engine.
XMMBP(J)	Bypass flow plug nozzle Mach number, where J = 1 for left engine and J = 2 for right engine.
XMP(J)	Mass flow plug nozzle Mach number, where J = 1 for left engine and J = 2 for right engine.
XPBR(J)	Bypass flow plug axial position, in., where J = 1 for left engine and J = 2 for right engine.
XPR(J)	Mass flow plug axial position, in., where J = 1 for left engine and J = 2 for right engine.

APPENDIX I

Module I

Inlet Distortion

A. Required Constants

The constants for inlet distortion calculations are given in the nomenclatures. Constants of the same name are also described by modules B and E. All constants are initialized to a value of 0.0.

1. IRAKE - Rake code

   where IRAKE = 5, inlet distortion using rotating rake

   IRAKE = 6, inlet distortion using nonrotating rake

   If IRAKE = 0, 1-4 skip module I

B. Calculation of Inlet Weight Flow/Mass Flow.

The same general equation can be used for the calculation of either an area from which mass flow is computed or for the direct calculation of weight flow. The difference will be in the way the calculated terms are used in succeeding calculations. The calculation path will be determined by the flag MFLO.

$$
\begin{aligned}
\text{APR(J) or WCR(J)} = \; & C1 + C2*XPR(J) + C3*PEXTR(J) + C4*XPR(J)^2 + \\
& C5*XPR(J)*PEXTR(J) + C6*PEXTR(J)^2 + C7*XPR(J)^3 + \\
& C8*XPR(J)^2 *PEXTR(J) + C9*XPR(J)* PEXTR(J)^2 + \\
& C10*PEXTR(J)^3 + C11*XPR(J)^4 + C12*XPR(J)^3 *PEXTR(J) \\
& + C13*XPR(J)^2 *PEXTR(J)^2 + C14*XPR(J)*PEXTR(J)^3 + \\
& C15*PEXTR(J)^4 + C16*XPR(J)^5 + C17*XPR(J)^4 *PEXTR(J) \\
& + C18*XPR(J)^3 *PEXTR(J)^2 + C19*XPR(J)^2 *PEXTR(J)^3 + \\
& C20*XPR(J)^3*PEXTR(J)^3 + C21*XPR(J)*PEXTR(J)^4 +
\end{aligned}
$$

$$C22*PEXTR(J)^5 + C23*XPR(J)^5 *PEXTR(J) + C24*XPR(J)*PEXTR(J)^5 + C25*XPR(J)^5* PEXTR(J)^5$$

(Eq. I-1)

Calculation for choked flow:

$$AMFD(J) \text{ OR } WCCR(J) = C51 + C52*XPR(J) + C53*XPR(J)^2 + C54*XPR(J)^3 + C55*XPR(J)^4 + C56 *XPR(J)^5$$

(Eq. I-2)

where $PEXTR(J) = PPS(J)/PTO/PPT(J)/PTO$

(Eq. I-3)

and

$$PPS(J) / PTO = \sum_{L=1}^{L=NPPS(J)} PEXIT(L) * KEXIT(L) / \sum_{L=1}^{L=NPPS(J)} KEXIT(L) * PTO$$

(Eq. I-4)

If MFLO is equal to 1 the area terms APR(J) and AMFD(J) are calculated and the following equations are used.

If PEXTR(J) is ≤ 0.6 then use the choked flow value to calculate a mass flow ratio as follows:

$$TTP(J) = \sum_{L=1}^{L=NPTT(J)} TTP(L) * KTTP(L) / \sum_{L=1}^{L=NPTT(J)} KTTP(L)$$

(Eq. I-5)

$$M/MOP(J) = (AMFD(J)*PPT(J)/PTO)/(XMO*SCAP(J))$$

(Eq. I-6)

where $XMO=0.9189*MACH*(1+0.2*MACH^2)^{-3}$

(Eq. I-7)

and MACH is obtained from Appendix A

If PEXTR(J)>0.6 then this equation is used:

$$M/MOP(J) = (APR(J)*XMFPNL*PPT(J)/PTO)/(XMFFO*((TTP(J) + 459.67)/\sqrt{(TTO + 459.67)}*SCAP(J))$$

(Eq. I-8)

where $XMPL = \sqrt{5*(PEXTR(J)^{-2/7}-1)}$

and $XMFPNL = 0.9189*XMPL*(1+0.2*XMPL^2)^{-3}$

(Eq. I-9)

Average flow plug exit total pressure ratio

$$PPT(J)/PTO = \sum_{L=1}^{L=NPPT(J)} PPT(L)*KPPT(L) / \sum_{L=1}^{L=NPPT(J)} KPPT(L)$$

(Eq. I-10)

Mass flow plug steady state distortion index

$$PAFSD(J) = ((PPT(L)/PTO)_{max} - (PPT(L)/PTO)_{min})/PPT(J)/PTO$$

(Eq. I-11)

Engine face Mach number.

$$AS(J) = (XMO*(SANF(J)/M/MOP(J))*PTI(J)/PTO)/SCAP(J)$$

(Eq. I-12)

where XMO is defined in Eq. I-7.

If AS(J) is ≥ 0.53177 then XMEF(J) is 1.0. Otherwise compute engine face Mach number by iteration from the following

$$AS(J) = 0.9189 * XMEF(J) * (1+0.2*XMEF(J)^2)^{-3}$$

(Eq. I-13)

If MFLO is equal to 0 (the default) the WC values are calculated and the following equations are used.

$$WC/WCC(J) = WCR(J)/WCCR(J)$$

(Eq. I-14)

$$WP(J) = (WCR(J)*(PTI(J)/PTO)*PTO)/(\sqrt{TT0+459.67} *RC)$$

(Eq. I-15)

where $RC= 14.696/\sqrt{518.68}$

which is a reference pressure divided by a reference temperature and is a constant used because of the flow plug calibration.

$$WCP(J) = MA*SEF*RC$$

(Eq. I-16)

where $MA = 0.9189*M2*(1+0.2*M2^2)^{-3}$

and $M2 = \sqrt{5*((PTI(J)/PTO/PI(J)/PTO)^{-2/7} -1)}$

$$M/MOP(J) = (WCR(J)*PTI(J)/PTO)/(XMO*SCAP(J)*RC)$$

(Eq. I-17)

where XMO is defined in Eq. I-7.

$$M/MOI(J) = (WCP(J)*PTI(J)/PTO)/(XMO*SCAP(J)*RC)$$

(Eq. I-18)

Engine face Mach number

$$EFMAC(J) = WCR(J)/(RC*SANF(J))$$

(Eq. I-19)

If EFMAC(J) ≥ 0.53177 set XMEF(J) equal to 1.0. If EFMAC(J) is < 0.53177 then compute XMEF(J) by iteration from the following expression

$$EFMAC(J) = 0.9189 *XMEF(J)*(1+0.2*XMEF^2)^{-3}$$

(Eq. I-20)

Computed engine face total temperature

$$TTE(J) = (TT0+459.67)/(1+0.2*XMEF(J)^2)$$

(Eq. I-21)

C. <u>Engine face data</u>

Average engine face total pressure ratio

$$PTI(J)/PTO = \sum_{L=1}^{L=NPTEF(J)} PTERAK(L)*KTERK(L) / \sum_{L=1}^{L=NPTEF(J)} KTERK(L)*PTO$$

(Eq. I-22)

Average engine face static pressure ratio

$$PI(J)/PTO = \sum_{L=1}^{L=NPSEF(J)} PERAKE(L)*KERAK(L) / \sum_{L=1}^{L=NPSEF(J)} KERAK(L)*PTO$$

(eq. I-23)

RMS pressure ratio

$$PRMS(L)/PTI(J) = PRMS(L)/PTI(J)/PTO*PTO$$

(Eq. I-24)

Engine face RMS turbulence

$$TFRMS(J) = \sum_{L=1}^{L=NPRMS(J)} PRMS(L) * KPRMS(L) / \sum_{L=1}^{L=NPRMS(J)} KPRMS(L) * PTO$$

(Eq. I-25)

Engine face static pressure distortion

$$ADPS(J) = ((PERAKE(L)/PTO)_{max} - (PERAKE(L)/PTO)_{min})/PI(J)/PTO$$

(Eq. I-26)

Engine face total pressure distortion

$$AFSD(J) = ((PTERAK(L)/PTO)_{max} - (PTERAK(L)/PTO)_{min})/PTI(J)/PTO$$

(Eq. I-27)

Aerodynamic interface plane (AIP) theta extents computed by the ARP 1420 methodology.[5] Using these areas and theta values the following parameters are computed:

Circumferential distortion by ring

$$DCI(J)(N) = (PAVR(J)(N) - PALWR(J)(N))/PAVR(J)(N)$$

(Eq. I-28)

where:

$$PALWR(J)(N) = PAVR(J)(N) - (ARXT(J)(N)/EXT(J)(N))$$

(Eq. I-29)

[5] Gas Turbine Engine Inlet Flow Distortion Guidelines, ARP Paper 1420, Society of Automotive Engineers, Inc.

Multiples per revolution by ring

$$MPR(J)(N) = \sum_{I=1}^{L=NUMEXT} AREA(I) / AREAMAX$$

(Eq. I-30)

Radial distortion by ring

$$DRI(J)(N) = ((PTI(J)/PTO)*PTO - PAVR(J)(N))/(PTI(J)/PTO)*PTO$$

(Eq. I-31)

If the inlet data is for a specific engine, then the engine constants may be input to compute the loss in surge pressure ratio

$$DPRS(J) = \sum_{N=1}^{N=NRING(J)} [KC(N) * DCI(J)(N) + KR(N) * DRI(J)(N) + K(N)]$$

(Eq. I-32)

Engine face stream forces

$$CAEF(J) = SANF(J)/(QO*SAREA(I))*((PTI(J)/PTO*PTO *(1+GAMJ*XMEF(J)^2))/((1+0.2*XMEF(J)^2)^{2/7})-PO$$

(Eq. I-33)

where SAREA(I) is obtained from Appendix D.

$$CAEFT = CAEF1 + CAEF2$$

(Eq. I-34)

D. <u>Bleed Flow Computations</u>

All bleed flow computations are to be made for a maximum of 12 separate bleeds in each engine.

Average bleed total pressure

$$PTAB(J)(I) = \sum_{L=1}^{L=NBT(J)(I)} PTB(L) * KPTB(L) / \sum_{L=1}^{L=NBT(J)(I)} KPTB(L) * PTO$$

(Eq. I-35)

Average bleed static pressure divided by freestream total pressure

$$PSAB(J)(I) = \sum_{L=1}^{L=NBS(J)(I)} PSB(L) * KPSB(L) / \sum_{L=1}^{L=NBS(J)(I)} KPSB(L) * PTO$$

(Eq. I-36)

Ratio of average bleed static to average bleed total pressure

$$PB(J)(I)/PTB(J)(I) = PSAB(J)(I)/PTAB(J)(I)$$

(Eq. I-37)

Bleed corrected mass flow from calibration

$$WCB(J)(I) = CB1(M) + CB2(M)*PB(J)(I)/PTB(J)(I) + CB3(M)*(PB(J)(I)/PTB(J)(I))^2 + CB4(M)*(PB(J)(I)/PTB(J)(I))^3 + CB5(M)*(PB(J)(I)/PTB)J)(I))^4$$

(Eq. I-38)

Bleed exit weight flow corrected to engine face

$$WCPB(J)(I) = (WCB(J)(I)*RC*\sqrt{TT0+459.67})/PTI(J)/PTO*PT0$$

(Eq. I-39)

Bleed mass flow ratio

$$M/MOB(J)(I) = (RC*WCB(J)(I)*PTAB(J)(I)*PTO)/MACH*SCAP(J)$$

(Eq. I-40)

where MACH is obtained from Appendix A

Bleed exit Mach number

$$XMBE(J)(I) = \sqrt{5*((1/PB(J)(I)/PTB(J)(I))^{-2/7} -1)}$$

(Eq. I-41)

If exit area is provided instead of a calibration then weight flow is computed in the following manner.

$$WCB(J)(I) = (MB*SAB(J)(I)*PTAB(J)(I)*PTO)/\sqrt{TTO+459.67}$$

(Eq. I-42)

where $MB = 0.9189 *XMBE(J)(I)*(1+0.2*XMBE(J)(I)^2)^{-3}$

(Eq. I-43)

Weight flow corrected to engine face

$$WCPB(J)(I) = WCB(J)(I)*RC*\sqrt{TTO+459.67}/PTI(J)/PTO*PTO$$

(Eq. I-44)

Bleed mass flow ratio is then computed

$$M/MOB(J)(I) = (WCB(J)(I)*\sqrt{TTO+459.67})/(SCAP(J)*MO*PTO)$$

(Eq. I-45)

E. <u>Calculation of Bypass Weight Flow/Mass Flow</u>

If there is a separate controlled bypass or ejector flow from the inlet, many of the same values must be calculated for the bypass controller as for the inlet flow controller. The same general equation can be used for the calculation of either an area from which mass flow is computed or for the direct calculation of weight flow. The difference will be in the way the calculated terms are used in succeeding calculations. The calculation path will be determined by the flag MFLB.

APBR(J) or WCBR(J) =

$$
\begin{aligned}
&CE1 + CE2*XPBR(J) + CE3*PEXBR(J) + CE4*XPBR(J)^2 + \\
&CE5*XPBR(J)*PEXBR(J) + CE6*PEXBR(J)^2 + CE7*XPBR1^3 \\
&+ CE8*XPBR(J)^2 *PEXBR(J) + CE9*XPBR(J)* PEXBR(J)^2 \\
&+ CE10*PEXBR(J)^3 + CE11*XPBR(J)^4 + CE12*XPBR(J)^3 \\
&*PEXBR(J)+CE13*XPBR(J)^2*PEXBR(J)^2+CE14*XPBR(J) \\
&*PEXBR(J)^3 +CE15*PEXBR(J)^4 + CE16*XPBR(J)^5 \\
&+ CE17*XPBR(J)^4 *PEXBR(J) + CE18*XPBR(J)^3 \\
&*PEXBR(J)^2 + CE19*XPBR(J)^2 *PEXBR(J)^3 \\
&+ CE20*XPBR(J)^3*PEXBR(J)^3*CE21*XPBR(J)*PEXBR(J)^4 \\
&+ CE22*PEXBR(J)^5 + CE23*XPBR(J)^5 *PEXBR(J) \\
&+ CE24*XPBR(J)*PEXBR(J)^5 + CE25*XPBR(J)^5* PEXBR(J)^5
\end{aligned}
$$

(Eq. I-46)

Calculation for choked flow:

AMFDB(J) or WCCBR(J) =

$$
\begin{aligned}
&CE51 + CE52*XPBR(J) + CE53*XPBR(J)^2 \\
&+ C54*XPBR(J)^3 + CE55*XPBR(J)^4 + CE56 *XPBR(J)^5
\end{aligned}
$$

(Eq. I-47)

where PEXBR(J) = PPBS(J)/PPBT(J)

(Eq. I-48)

$$PSBD(J) = \sum_{L=1}^{L=NPPBS(J)} PPBS(L) * KPPBS(L) / \sum_{L=1}^{L=NPPBS(J)} KPPBS(L) * PTO$$

(Eq. I-49)

and

$$PPBT(J) = \sum_{L=1}^{L=NPPBT(J)} PPBT(L) * KPPBT(L) / \sum_{L=1}^{L=NPPBT(J)} KPPBT(L) * PTO$$

(Eq. I-50)

If MFLB is equal to 2 the area terms APBR(J) and AMFDB(J) are calculated and the following equations are used.

If PEXBR(J) is ≤ 0.6 then use the choked flow value to calculate a mass flow ratio as follows:

$$TTBP(J) = \sum_{L=1}^{L=NPTTB(J)} TTBP(J)(L) * KTTB(J)(L) / \sum_{L=1}^{L=NPTTB(J)} KTTB(J)(L)$$

(Eq. I-51)

M/MOBP(J) =(AMFDB(J)*PPBT(J)/PTO)/(XMO*SCAP(J))

(Eq. I-52)

where XMO is defined in Eq. I-7.

If PEXBR(J)>0.6 then this equation is used:

$$M/MOBP(J) = (AP(J)*XMFPBNL*PPBT(J)/PTO)/(XMO*((\sqrt{TTPB(J)+459.67}\ /\sqrt{TTO+459.67})*SCAP(J))$$

(Eq. I-53)

where $XMPBL = \sqrt{5*(PEXBR(J)^{-2/7}-1)}$

(Eq. I-54)

and $XMFPBNL = 0.9189*XMPBL*(1+0.2*XMPBL^2)^{-3}$

(Eq. I-55)

Average bypass flow plug total pressure ratio

$$PTBD(J) = \sum_{L=1}^{L=NPPBT(J)} PTRAKB(L) * KPTRK(L) / \sum_{L=1}^{L=NPPBT(J)} KPTRK(L) * PTO$$

(Eq. I-56)

Bypass mass flow plug steady state distortion index

$$PFSDB(J) = (PPBT(L)/PTO)_{max} - (PPBT(L)/PTO)_{min}/PPBT(J)/PTO$$

(Eq. I-57)

Bypass instrumentation plane Mach number.

$$ASB(J) = (XMO*(SANF(J)/M/MOP(J))*PTBD(J)/P)/SCAPB(J)$$

(Eq. I-58)

where XMO is defined in Eq. I-7.

(Eq. I-59)

If ASB(J) is ≥ 0.53177 then XMBF(J) is 1.0. Otherwise compute instrumentation plane Mach number by iteration from the following

$$ASB(J) = 0.9189 *XMFB(J)*(1+0.2*XMFB(J)^2)^{-3}$$

(Eq. I-60)

If MFLO is equal to 0 (the default) the WC values are calculated and the following equations are used.

$$WC/WCCB(J) = WCBR(J)/WCCBR(J)$$

(Eq. I-61)

$$WBP(J) = (WCBR(J)*(PTBD(J)/PTO)*PTO)/(\sqrt{TT0+459.67}\ *RC)$$

(Eq. I-62)

where $RC= 14.696/\sqrt{518.68}$

which is a reference pressure divided by a reference temperature and is a constant used because of the flow plug calibration.

$$WCPB(J) = MA*SEFB*RC$$

(Eq. I-63)

where $MA = 0.9189*M3*(1+0.2*M3^2)^{-3}$

and $M3 = \sqrt{5*((PTBD(J)/PPBS(J))^{2/7} -1)}$

$$M/MOBP(J) = (WCBR(J)*PTBD(J)/PTO)/(XMO*SCAPB(J)*RC)$$

(Eq. I-64)

where XMO is defined in Eq. I-7.

$$M/MOBI(J) = (WCPB(J)*PTBD(J)/PTO)/(MO*SCAPB(J)*RC)$$

(Eq. I-65)

Bypass instrumentation plane Mach number

$$XMFB(J) = WCBR(J)/(RC*SANFB(J))$$

(Eq. I-66)

If EFMACB(J) ≥ 0.53177 set XMFB(J) equal to 1.0. If EFMACB(J) is < 0.53177 then compute XMFB(J) by iteration from the following expression

$$EFMACB(J) = 0.9189\ *XMFB(J)*(1+0.2*XMFB(J)^2)^{-3}$$

(Eq. I-67)

$$TTB(J) = (TT0+459.67)/(1+0.2*XMFB(J)^2)$$

(Eq. I-68)

F. Total Airflow

Total corrected mass flow ratio

$$M/MOT(J) = M/MOP(J) + \sum_{I=1}^{I=NBLD(J)} M/MOB(J)(I) + M/MOBP(J)$$

(Eq. I-69)

Total corrected weight flow

$$WCT(J) = WCR(J) + \sum_{I=1}^{I=NBLD(J)} WCPB(J)(I) + WCBR(J)$$

(Eq. I-70)

Total physical weight flow at engine face

$$WPT(J) = WP(J) + \sum_{I=1}^{I=NBLD(J)} WCB(J)(I) + WBP(J)$$

(Eq. I-71)

F. Bad Tube Substitution Scheme

The calculations that use the engine face total pressures require that there be values for all pressures on the rake. Since it is an unusual occurrence to get through a test without losing some pressures, a probe substitution scheme has been added to the data reduction. This system works from a ring rake probe numbering scheme as shown in figure I-1. All engine face total pressures must be numbered and arranged in this order. Although the figure shows a 40 probe arrangement with five rings and eight rakes, it will

also work for a different arrangement of more or less rings with more or less probes as long as all the rings have the same number of pressures. In the following explanation 'n' will denote ring number and 'm' will denote rake number. The KTERK values are used to activate the probe substitution. When a KTERK value is zero, the program determines where the bad probe is located and substitutes for it by the following criteria. All probe substitutions are made before any values using the total pressures are computed.

1. One bad probe on an interior ring (rings 2, 3, or 4). This value will be taken as an average of the four surrounding values, two from the same ring, two from the same rake.

$$P_{(n,m)} = \frac{[P_{(n,m+1)} + P_{(n,m-1)} + P_{(n+1,m)} + P_{(n-1,m)}]}{4}$$

(Eq. I-72)

2. One bad probe on an I. D. or O. D. ring (rings 1 or 5). This value will be computed as an average of the three surrounding values.

$$P_{(1,m)} = \frac{[P_{(1,m+1)} + P_{(1,m-1)} + P_{(2,m)}]}{3}$$

$$P_{(5,m)} = \frac{[P_{(5,m+1)} + P_{(5,m-1)} + P_{(4,m)}]}{3}$$

3. Two adjacent probes bad on an interior ring. Values for this case are computed using the average of the three surrounding values, two from the same rake, and one from the same ring.

$$P_{(n,m)} = \frac{[P_{(n+1,m)} + P_{(n-1,m)} + P_{(n,m-1)}]}{3}$$

$$P_{(n,m+1)} = \frac{[P_{(n+1,m+1)} + P_{(n-1,m+1)} + P_{(n,m+2)}]}{3}$$

(Eq. I-73)

4. Two adjacent probes bad on an I. D. or O. D. ring. These values are computed from the average of the two surrounding values, one from the same rake, and one from the same ring.

$$P_{(1,m)} = \frac{[P_{(1,m-1)} + P_{(2,m)}]}{2}$$

$$P_{(1,m+1)} = \frac{[P_{(1,m+2)} + P_{(2,m+1)}]}{2}$$

$$P_{(5,m)} = \frac{[P_{(5,m-1)} + P_{(4,m)}]}{2}$$

$$P_{(5,m+1)} = \frac{[P_{(5,m+2)} + P_{(4,m+1)}]}{2}$$

(Eq. I-74)

5. Two adjacent interior probes bad on the same rake. These values are computed as the average of two probes from the same ring, and one from the same rake.

$$P_{(n,m)} = \frac{[P_{(n,m+1)} + P_{(n,m-1)} + P_{(n-1,m)}]}{3}$$

$$P_{(n+1,m)} = \frac{[P_{(n+1,m+1)} + P_{(n+1,m-1)} + P_{(n+2,m)}]}{3}$$

(Eq. I-75)

6. Two adjacent probes bad on the same rake, with one being on an I D. or O. D. ring.

$$P_{(5,m)} = \frac{[P_{(5,m+1)} + P_{(5,m-1)}]}{2}$$

$$P_{(4,m)} = \frac{[P_{(4,m+1)} + P_{(4,m-1)} + P_{(3,m)}]}{3}$$

$$P_{(1,m)} = \frac{[P_{(1,m+1)} + P_{(1,m-1)}]}{2}$$

$$P_{(2,m)} = \frac{[P_{(2,m+1)} + P_{(2,m-1)} + P_{(3,m)}]}{3}$$

(Eq. I-76)

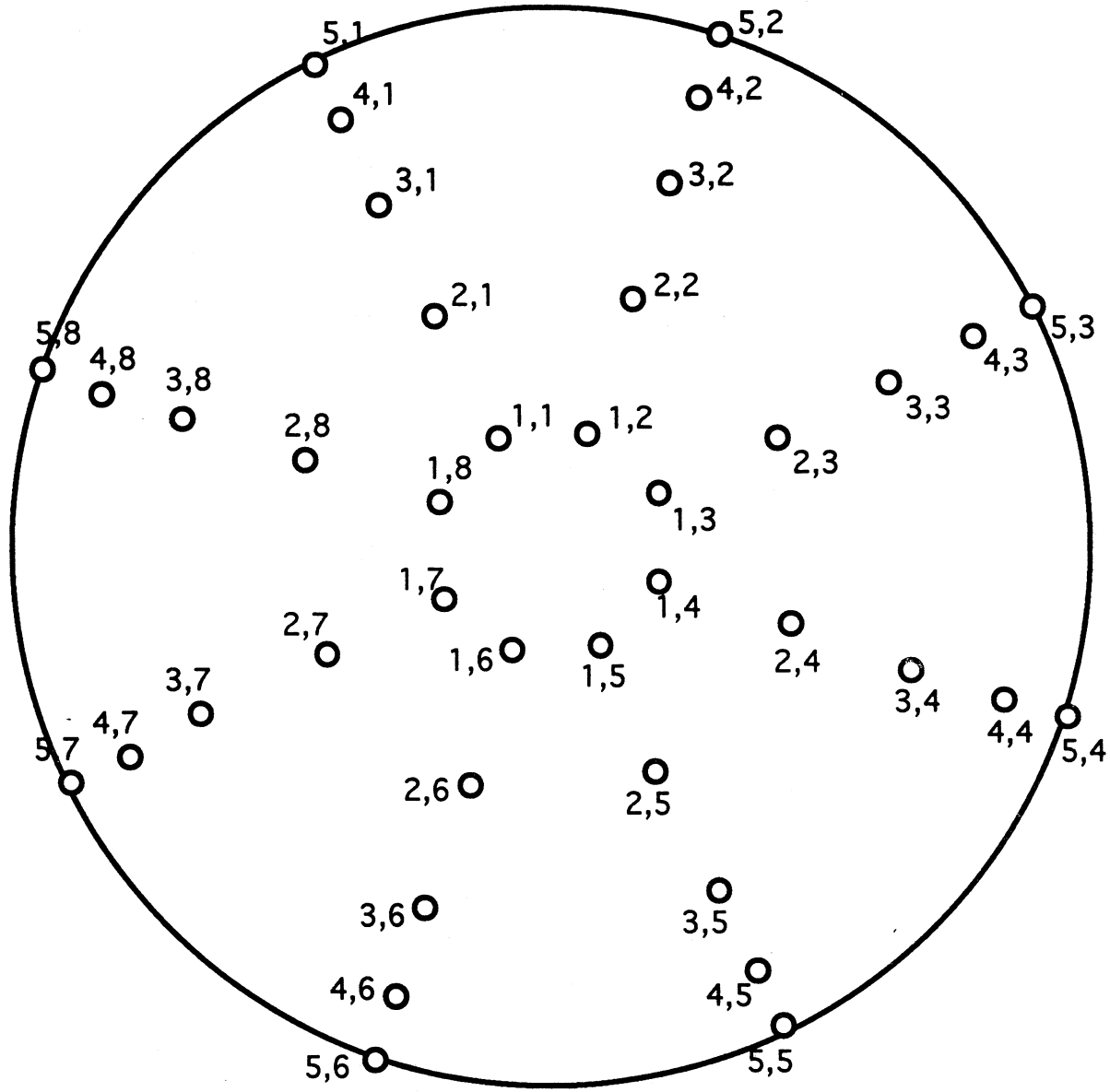

Figure I-1. Ring rake probe numbering scheme.

REPORT DOCUMENTATION PAGE

Form Approved
OMB No. 0704-0188

Public reporting burden for this collection of information is estimated to average 1 hour per response, including the time for reviewing instructions, searching existing data sources, gathering and maintaining the data needed, and completing and reviewing the collection of information. Send comments regarding this burden estimate or any other aspect of this collection of information, including suggestions for reducing this burden, to Washington Headquarters Services, Directorate for Information Operations and Reports, 1215 Jefferson Davis Highway, Suite 1204, Arlington, VA 22202-4302, and to the Office of Management and Budget, Paperwork Reduction Project (0704-0188), Washington, DC 20503.

1. AGENCY USE ONLY *(Leave blank)*

2. REPORT DATE
July 1992

3. REPORT TYPE AND DATES COVERED
Technical Memorandum

4. TITLE AND SUBTITLE
Data Reduction Formulas for the 16-Foot Transonic Tunnel - NASA Langley Research Center - Revision 2

5. FUNDING NUMBERS
WU 505-62-30-01

6. AUTHOR(S)
Charles E. Mercer, Bobby L. Berrier, Francis J. Capone, Alan M. Grayston

7. PERFORMING ORGANIZATION NAME(S) AND ADDRESS(ES)
NASA Langley Research Center
Hampton, VA 23665-5225

8. PERFORMING ORGANIZATION REPORT NUMBER

9. SPONSORING/MONITORING AGENCY NAME(S) AND ADDRESS(ES)
National Aeronautics and Space Administration
Washington, DC 20546-0001

10. SPONSORING/MONITORING AGENCY REPORT NUMBER
NASA TM-107646

11. SUPPLEMENTARY NOTES
Supersedes NASA TM-86319, Revision 1, January 1987.
Mercer, Berrier, and Capone: Langley Research Center, Hampton, Virginia.
Grayston: Wyle Laboratories, Hampton, Virginia.

12a. DISTRIBUTION/AVAILABILITY STATEMENT
Unclassified - Unlimited

Subject Category 09

12b. DISTRIBUTION CODE

13. ABSTRACT *(Maximum 200 words)*

The equations used by the 16-Foot Transonic Tunnel in the data reduction programs are presented in nine modules. Each module consists of equations necessary to achieve a specific purpose. These modules are categorized in the following groups: a) tunnel parameters, b) jet exhaust measurements, c) skin friction drag, d) balance loads and model attitudes calculations, e) internal drag (or exit-flow distributions), f) pressure coefficients and integrated forces, g) thrust removal options, and h) turboprop options, i) inlet distortion

This document is a companion document to NASA TM-102750, A User's Guide to the Langley 16-Foot Transonic Tunnel, September 1990.

14. SUBJECT TERMS
Data Reduction
Wind Tunnel
Aerodynamics
Propulsion

15. NUMBER OF PAGES
288

16. PRICE CODE
A13

17. SECURITY CLASSIFICATION OF REPORT
Unclassified

18. SECURITY CLASSIFICATION OF THIS PAGE
Unclassified

19. SECURITY CLASSIFICATION OF ABSTRACT
Unclassified

20. LIMITATION OF ABSTRACT