NASA/TM-2003-212644

Initial SVS Integrated Technology Evaluation Flight Test Requirements and Hardware Architecture

Stella V. Harrison, Lynda J. Kramer, Randall E. Bailey, Denise R. Jones, Steven D. Young, Steven D. Harrah, Jarvis J. Arthur, and Russell V. Parrish
Langley Research Center, Hampton, Virginia

September 2003

The NASA STI Program Office . . . in Profile

Since its founding, NASA has been dedicated to the advancement of aeronautics and space science. The NASA Scientific and Technical Information (STI) Program Office plays a key part in helping NASA maintain this important role.

The NASA STI Program Office is operated by Langley Research Center, the lead center for NASA's scientific and technical information. The NASA STI Program Office provides access to the NASA STI Database, the largest collection of aeronautical and space science STI in the world. The Program Office is also NASA's institutional mechanism for disseminating the results of its research and development activities. These results are published by NASA in the NASA STI Report Series, which includes the following report types:

- TECHNICAL PUBLICATION. Reports of completed research or a major significant phase of research that present the results of NASA programs and include extensive data or theoretical analysis. Includes compilations of significant scientific and technical data and information deemed to be of continuing reference value. NASA counterpart of peer-reviewed formal professional papers, but having less stringent limitations on manuscript length and extent of graphic presentations.

- TECHNICAL MEMORANDUM. Scientific and technical findings that are preliminary or of specialized interest, e.g., quick release reports, working papers, and bibliographies that contain minimal annotation. Does not contain extensive analysis.

- CONTRACTOR REPORT. Scientific and technical findings by NASA-sponsored contractors and grantees.

- CONFERENCE PUBLICATION. Collected papers from scientific and technical conferences, symposia, seminars, or other meetings sponsored or co-sponsored by NASA.

- SPECIAL PUBLICATION. Scientific, technical, or historical information from NASA programs, projects, and missions, often concerned with subjects having substantial public interest.

- TECHNICAL TRANSLATION. English-language translations of foreign scientific and technical material pertinent to NASA's mission.

Specialized services that complement the STI Program Office's diverse offerings include creating custom thesauri, building customized databases, organizing and publishing research results ... even providing videos.

For more information about the NASA STI Program Office, see the following:

- Access the NASA STI Program Home Page at ***http://www.sti.nasa.gov***

- E-mail your question via the Internet to help@sti.nasa.gov

- Fax your question to the NASA STI Help Desk at (301) 621-0134

- Phone the NASA STI Help Desk at (301) 621-0390

- Write to:
  NASA STI Help Desk
  NASA Center for AeroSpace Information
  7121 Standard Drive
  Hanover, MD 21076-1320

NASA/TM-2003-212644

Initial SVS Integrated Technology Evaluation Flight Test Requirements and Hardware Architecture

Stella V. Harrison, Lynda J. Kramer, Randall E. Bailey, Denise R. Jones, Steven D. Young, Steven D. Harrah, Jarvis J. Arthur, and Russell V. Parrish
Langley Research Center, Hampton, Virginia

National Aeronautics and
Space Administration

Langley Research Center
Hampton, Virginia 23681-2199

September 2003

Available from:

NASA Center for AeroSpace Information (CASI)
7121 Standard Drive
Hanover, MD 21076-1320
(301) 621-0390

National Technical Information Service (NTIS)
5285 Port Royal Road
Springfield, VA 22161-2171
(703) 605-6000

FOREWORD

This document presents the flight test requirements for the Initial Synthetic Vision Systems Integrated Technology Evaluation Flight Test to be flown aboard NASA Langley's ARIES aircraft and the final hardware architecture implemented to meet these requirements. Part I of this document contains the hardware, software, simulator, and flight operations requirements for this flight test as they were defined in August 2002. The contents of this section are the actual requirements document that was signed for this flight test. As such, the section headings, content and formatting follow the guidelines as defined in Langley Management System (LMS-CP-0960) procedure for conducting research aboard a NASA Langley aircraft. Part II of this document contains information pertaining to the hardware architecture that was realized to meet these requirements as presented to and approved by a Critical Design Review Panel prior to installation on the B-757 Airborne Research Integrated Experiments Systems (ARIES) airplane. This information includes a description of the equipment, block diagrams of the architecture, layouts of the workstations, and pictures of the actual installations.

PART I

REQUIREMENTS DOCUMENT FOR THE INITIAL SYNTHETIC VISION SYSTEMS INTEGRATED TECHNOLOGY EVALUATION FLIGHT TEST

FLIGHT TEST REQUIREMENTS DOCUMENT

Aviation Safety Program
Synthetic Vision Systems (SVS) Project
INitial SVS Integrated Technology Evaluation (InSITE)

Version 2.4
8/5/02

Prepared by

Lynda J. Kramer
CVIB/AirSC/LaRC
(757) 864-8146

Contributing Authors:

Jarvis J. Arthur, CVIB/AirSC/LaRC
Randall E. Bailey, CVIB/AirSC/LaRC
Tim Etherington, Rockwell Collins
Michael Franklin, BAE Systems
Steven D. Harrah, SRB/AirSC/LaRC
Denise R. Jones, SIB/AirSC/LaRC
Lynda J. Kramer, CVIB/AirSC/LaRC
Dave McKay, CMC Electronics
R. Michael Norman, Boeing
Russell V. Parrish, CVIB/AirSC/LaRC
Steven D. Young, SIB/AirSC/LaRC

Concurrence:

Head, CVIB/AirSC

Aviation Manager, AirSC

Head, SDB/AirSC

Manager, SASA/AirSC

1. REVISION CONTROL TABLE

Version	Date	Author & Description
1.0	4/29/02	Lynda Kramer. Baseline document.
2.0	6/13/02	Lynda Kramer. Incorporated SRR panel member comments. Replaced pilot-not-flying display (PNFD) references with synthetic vision auxiliary display (SVAD). Removed requirement for use of new Data Acquisition System (Updated 4-20). Removed Requirement for Technology Transfer Area modifications (Deleted 4-85, 4-86). Removed requirements from Appendices and placed them in body of document (Deleted Appendix 9.2-9.5; updated 4-7, 4-8, 4-14, 5-2). Updated 9.1 Appendix A acronym list. Updated Section 7 formatting to indicate requirements in this section. Made sure only requirements were enumerated in Sections 4-7 (Reformatted 4-38, 4-53, 4-81, 4-96 as these were not requirements). Updated Video Requirements (Updated Table 4.7, 4-98, Added 4-91 and 4-92). Incorporated DIME changes given by PI. Updated Figure 4.14. Revised 4-67, 4-69, 4-71 and omitted 4-73. Table 4.1, removed “ALTM Control Device”. Table 4.2, “Terrain Database Integrity” is a unit-less value (1, 0, -1), removed desired and acceptable resolution requirements. Table 4.2, “Terrain Database Integrity (RMS)” does have units of meters-squared. Desired and acceptable resolution requirements were listed here (0.01, 0.1). Section 7-11 (System Validation Requirements), removed (3) Calibration of ALTM orientation. Removed FDI CCD camera requirements (Deleted 4-55&4-56, updated Fig. 4.8). Incorporated RIPS changes given by PI. Updated Figures 4.1 and 5.2. Removed cockpit speaker requirement (Figure 4.1, Table 4.1, Figure 4.11, omitted 4-90, omitted 5-6, 6-19). Removed requirement that RIPS audible alerts be generated from the Onyx (Figure 4.1, Figure 4.11, 4-89, omitted 5-6, 6-19, omitted 6-31). Updated Table 4.3. Revised requirements under Section 7.3 to reflect that ADS-B data needs to include altitude information. Revised requirements under section 7.4 to reflect potential use of non-Langley aircraft. Added 1030/1090 data link requirement (Figure 4.1, Table 4.1, Figure 4.11, 4-53). Incorporated changes given by SVS Chief Scientist. Updated Goals and Objective Section and SV Sensors description under section 5.1.1. Updated Figure 4.2, Figure 4.5, Figure 4.6, Figure 4.7, Figure 4.10, 4-29. Updated requirements to indicated need for ethernet connection between pallets so R-C could use aural warnings output from SVS ND computer (Updated 4-22, added new requirement 4-23, deleted 4-51). Added FLIR pod alignment and image scaling under Sections 7.3 and 7.16. Moved reqts 4-45-46, 4-48-449 to Section 4.1.2. Replaced 1U computer references with 2U computer (Figure 4.4). Incorporated changes given by SV Sensor PI. Replaced Figure 4.13.

Version	Date	Author & Description
2.1	6/28/02	Lynda Kramer. Replaced Figure 4.14 to show following changes: 1)using TBD for pallets hosting DIME computer and KVM; 2)removed IRIG-B input from DIME.computer. Removed intercom audio requirement on SV Sensors videotapes (4-86). Replaced UAT datalink reference with ADS-B datalink (6-33) Relaxed requirement for experimental display recordings in FSIL/RSIL (6-4). Replaced RS232 references with Ethernet references (Section 5.1.1 SV Sensors and Figure 5.4) Modified wording on HUD camera video recording (4-89). Identified format for SVAD presentation to jumpseat observer and evaluation pilot (added new requirements 4-8 and 4-9). Identified push-to-listen function for VRS (added requirement 4-11). Updated video distribution paths in Figures (Replaced Figure 4.3, 4.5, 4.6, 4.7, & 4.10)
2.2	7/12/02	Lynda Kramer. Incorporated Acting Aviation Manager's comments (4-7, 4-18, 4-29, 4-69, 4-72, 4-73, 4-84, 4-85, 5-12, 7-11, 7.14, 7-27, 7-25. 7-31). Moved requirement 4-93 to Section 7.12 (Deleted 4-93 Added 7-30). Added sentence in Section 6.2.2 that a Pilot Briefing Guide will be provided by InSITE researchers.
2.3	7/31/02	Doug Arbuckle. Corrected statement of certain requirements ("shall") to reflect their actual status as recommendations ("should"), reflecting SASA resource constraints and INSITE researcher priorities.
2.4	8/5/02	Lynda Kramer. Updated FLIR format references (Replaced Figures 4.5-4.8, 4.10) and audio output to intercom system via the VRS (Replaced Figure 4.1&4.11, deleted requirement 4-19). Deleted Rockwell Collins removable disk X3 equipment and castle switch for HUD declutter (Updated Table 4.1). Refined Section 7.6.and prioritized weather conditions. Updated RVR measurement requirement (Updated 7-36). Deleted Figure 4.8and reflected this figure deletion in subsequent table numbering in Section 4 and in requirement 4-45 (Deleted Figure 4.8; updated 4-45; renumbered Tables 4.9-4.14 to Tables 4.8-4.13).

Part I
Table of Contents

List of Figures

List of Tables

3. PROGRAM OVERVIEW

3.1 General Description

Limited visibility is the single most critical factor affecting both the safety and capacity of worldwide aviation operations. In commercial aviation, over 30-percent of all fatal accidents worldwide are categorized as Controlled Flight Into Terrain (CFIT), where a functioning airplane is inadvertently flown into the ground, water, or an obstacle. Limited visibility and reduced situational awareness are predominant causal factors for CFIT accidents. Another type of accident involving restricted visibility combined with compromised situational awareness is runway incursions. In support of the NASA's Aviation Safety Program (AvSP), the Synthetic Vision Systems (SVS) Project is developing technologies with practical applications that will eliminate low-visibility conditions as a causal factor to civil aircraft accidents. SVS also seeks to replicate the operational benefits of flight operations in bright, clear, sunny day conditions, regardless of the actual outside weather conditions. SVS emphasizes the cost-effective use of synthetic/enhanced-vision displays; worldwide navigation, terrain, obstruction, and airport databases; Global Positioning System (GPS)-derived navigation; and ranging and imaging sensors to eliminate "visibility-induced" (lack of visibility) errors for all aircraft categories (transports, General Aviation, rotorcraft).

3.2 Goals and Objectives

Figure 3.1 illustrates the goals and objectives of the SVS Project (see Reference 1).

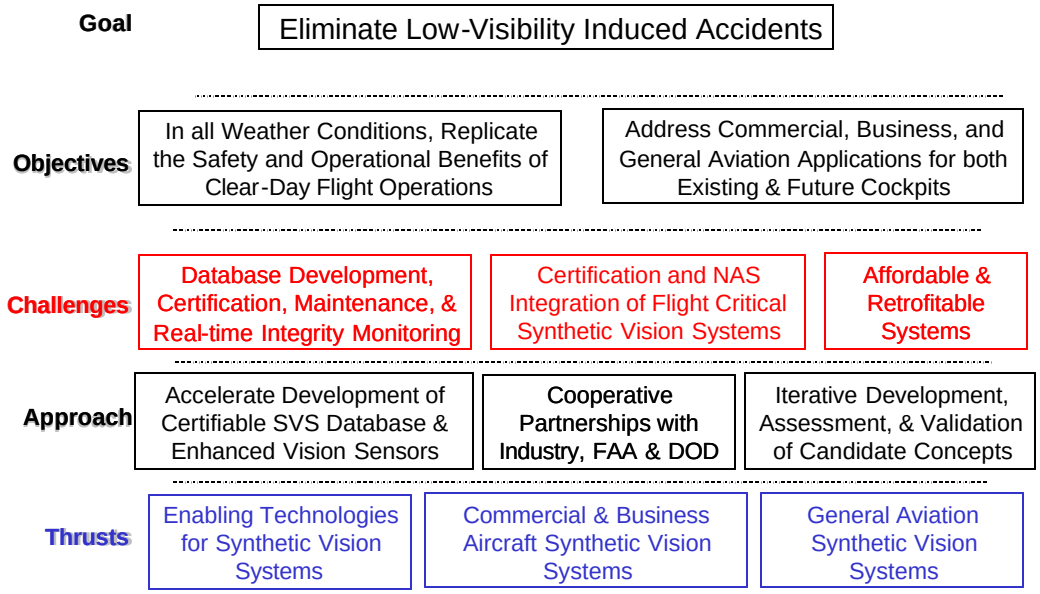

Figure 3.1. Overview of Synthetic Vision System Project Efforts

The goals and objectives of the INitial SVS Integrated Technology Evaluation (InSITE) were generated by the SVS flight-test team in response to the SVS Project and established project plan and milestones. As such, the primary purpose of InSITE is to emphasize the system aspects of the SVS concepts involved.

Previous SVS Flight Tests (DFW/2000 and EGE/2001) have primarily focused on the general use and usefulness of SVS for providing flight critical guidance and improved situational awareness. The research objectives of these previous flight tests were focused on the SVS display (e.g., size, content, and format) and on SVS enabling technologies (e.g., Runway Incursion Prevention System, RIPS; Enhanced Vision System, EVS; and database integrity monitoring experiment, DIME). While differential GPS (D-GPS) and on-board databases can provide the primary framework for an operational SVS, many in the aviation community believe that independent integrity monitors for both surveillance and navigational functions will be required to meet certification and safety requirements. This functionality will rely heavily on existing on-board sensors (e.g., weather radars, high quality radar altimeters) to provide real-time integrity monitoring for the databases. Specifically, on-board integrity sensors will provide independent air-to-air, air-to-ground, ground-to-ground, and ground-to-air traffic and object surveillance, a runway incursion monitor and a confirmation of database integrity and registration (navigational position confirmation via terrain feature extraction). Additionally, the requirements for augmenting SVS concepts with the independent capabilities of weather-penetrating, enhanced vision imaging sensors during low visibility landing and surface operations conditions will be explored. These technologies form the basis for monitoring the dynamic flight environment and thereby supplement the synthetic world with real-time, direct measurement of the surrounding terrain and air/ground traffic. This series of flight tests proposes to integrate these enabling technologies into the larger SVS concept design, with such a design ultimately being introduced into the commercial air transport market.

The requirements given in this document encompass testing of three SVS systems (NASA, BAE Systems, and Rockwell-Collins) as well as four specific NASA SVS component technologies (SVDC, RIPS, SV Sensors and DIME). These elements and their objectives are described in further detail below.

NASA SVS

The NASA SVS encompasses the integration of tactical and strategic Synthetic Vision Display Concepts (SVDC) with Runway Incursion Prevention System (RIPS) alerting and display concepts, real-time terrain database integrity monitoring equipment (DIME) and algorithms, and Enhanced Vision Systems (EVS) and/or improved Weather Radar for object detection.

The NASA SVS objectives are as follows:

1. Initial flight test evaluation of *integrated* tactical and strategic NASA SVS concepts intended for commercial and business aircraft in a terrain-challenged operational environment.
2. Flight test evaluation of industry-partner (Rockwell-Collins and BAE Systems) integrated tactical and strategic SVS/EVS concepts intended for commercial and business aircraft in a terrain-challenged operational environment.
3. Onboard flight demonstration of integrated tactical and strategic SVS/EVS concepts to key industry and government representatives.

<u>BAE Systems (BAE) SVS</u>

BAE is defining and developing a cost-effective future transport aircraft flight deck information management and display system based on synthetic and enhanced vision concepts that will significantly reduce or eliminate visibility-induced accidents; improve situational awareness; increase safety; and reduce delays, diversions, and cancellations.

The BAE objectives are as follows:

1. Investigate operational utility and acceptability of enhanced Terrain/Obstacle awareness provided by SVS display concepts for approach procedures, including approach procedures in a terrain-challenged operational environment.

    a. Usefulness of raster Head-up Display (HUD) Millimeter Wave radar (MMWR) image for situational awareness of Pilot Flying (PF);
    b. Usefulness of raster HUD Forward Looking Infra-Red (FLIR) image for situational awareness of Pilot Flying;
    c. Usefulness of raster HUD fused MMWR/FLIR image for situational awareness of Pilot Flying;
    d. Usefulness of above in absence of basic terrain display primary flight display (PFD);
    e. Usefulness of above in conjunction with basic terrain display PFD;
    f. Ability of crew to integrate pilot not flying (PNF) monitoring of sensor imagery with normal flight deck duties during approach;

2. Demonstrate runway incursion detection capability of FLIR and MMWR sensors:

    a. Ability of PF to detect runway incursion;
    b. Ability of PNF to detect runway incursion;

3. Investigate operational improvements available from fusion of FLIR and MMWR imagery

4. Collect subjective opinion on various image processing enhancements

5. Collect radar data for future algorithm development

Rockwell Collins (R-C) SVS

R-C is developing, simulating, and flight testing prototype synthetic vision information system (SVIS) displays. The synthetic vision displays include a pathway PFD format, a planform and vertical profile map format, and a HUD wireframe terrain format.

The R-C objectives are as follows:

1. Investigate operational utility and acceptability of enhanced terrain awareness of SVS display concepts to Required Navigation Performance (RNP) approach procedures in a terrain-challenged operational environment.
    a. Assess pilot path control performance during manually-flown landing, approach and go-around maneuvers in a terrain-challenged operational environment with SVS display concepts using instrument and visual approach procedures.
    b. Assess auto-pilot (using ship's system inputs) monitoring utility and operational acceptability of SVS display concepts in a terrain-challenged operational environment.
    c. Graphical techniques will be used to show the relationship between Actual Navigation Performance (ANP) and RNP including flight technical/systems error for both hand flown and auto-flight procedures
2. Demonstrate integrated terrain, traffic, weather and pathway displays for both surface movement and airborne procedures.
    a. Integration of RIPS algorithms with surface guidance (SGS) displays.
    b. Integration of DIME algorithms including trend information for integrity monitoring.
    c. Integration of enhanced sensors with fusion integration techniques for both FLIR and x-band radar information to include display of object and terrain detection with sensors.
    d. Integration and display of combined track information for traffic and other objects.
    e. Integration of simulated onboard and datalinked weather in a graphical form.
    f. Integration of obstacle data in a graphical form including demonstration of a datalinked NOTAM obstacle (simulated).
    g. Integration of SVIS guidance concepts with the MCP and auto-flight system.
3. Validate SVIS flight deck operational concepts for flight decks with and without a HUD.
4. Evaluate operational systems errors on terrain representations for conformal displays.

SVDC

The SVDC provides the human-machine interface to NASA SVS for pilots. Display elements include, for example: perspective terrain, flight path guidance, and traffic information both in the air and on the surface. These display elements will be presented on multiple display surfaces (HUD; PFD; Navigation Display, ND; and Synthetic Vision Auxiliary Display, SVAD) for this flight test. SVDC also includes pilot inputs.

The SVDC objectives are as follows:

1. Investigate operational utility and acceptability of enhanced terrain awareness of SVS display concepts to RNP approach procedures in a terrain-challenged operational environment.
    a. Assess pilot path control performance during manually-flown landing approach and go-around maneuvers in a terrain-challenged operational environment, with and without SVS display concepts, and determine the effect on that performance of the presence of SVS components.
    b. Assess auto-pilot (using ship's system inputs) monitoring utility and operational acceptability of SVS display concepts in a terrain-challenged operational environment
2. Demonstrate symbology transition strategies on the head-up display, primary flight display and the navigation display for air to ground operations and ground to air operations.
3. Evaluate terrain texturing (photorealistic, elevation-based) techniques and viewpoint locations (planform, perspective) on the Navigation Display (ND).
4. Demonstrate methods of presenting database loss-of-integrity alerts to the crew.
5. Demonstrate methods of iconic presentation of sensor-detected objects (unmapped towers, runway and taxiway obstacles, runway confirmation wireframe) from a weather radar and/or a FLIR camera into the SVS database presentation.
6. Demonstrate real-time insertion of iconic objects (e.g. towers, closed runway / taxiway) from a NOTAM source (simulated data link) into the SVS database presentation.

<u>RIPS</u>

The RIPS research system makes use of advanced displays, data links, and GPS to enable equipped aircraft to operate at airports independent of visibility while ensuring safety. This is done by providing pilots with supplemental situational awareness and guidance cues, a real-time display of airport traffic, and alerts of runway incursions and route deviations on both a HUD and an electronic moving map (EMM) of the airport.

The RIPS objectives are as follows:

1. Demonstrate RIPS integrated with the Synthetic Vision Display Concepts in an operational environment
    - Perform selected maneuvers with the test aircraft and equipped vehicles (aircraft and/or van acting as incurring traffic) to show how runway incursion alerting can eliminate incursion-induced accidents during landing, takeoff, and taxi. Surveillance information will be provided by sensor object detection and Automatic Dependent Surveillance-Broadcast (ADS-B) sources.
    - Perform selected maneuvers with the test aircraft to show how tactical and strategic displays can be used to provide enhance situational awareness and

guidance in any visibility, thus reducing the likelihood of inadvertent route deviation or ownship runway incursion due to blunder during taxi.

2. Validate proposed operational and technical requirements
    - Compare test data with draft standards and requirements that have been generated through analytical and flight simulation activities. The resulting data can impact a broad range of requirements from crew roles and procedures (i.e. how these displays should be used), to data accuracies, update rates, and end-to-end system performance
3. Assess technology performance
    - Through the collection and analysis of flight test data, assess the capability of the ADS-B data link, sensor object detection systems, and onboard incursion alerting system to support the system concept and operational requirements.

DIME

The DIME subsystem is designed to provide a quantifiable level of integrity for the Digital Elevation Models (DEMs) used by the NASA SVS. In general, this is accomplished by performing a real-time comparison of the DEM with measurements made by onboard ranging sensors.

The DIME objectives are as follows:

1. Characterize the Digital Elevation Model (DEM) integrity monitor's operational behavior using three standard B-757 radar altimeters, a weather radar, the standard Inertial Navigation System (INS), and a Wide-Area Augmentation System (WAAS) receiver.
2. Assess the quality of multiple DEMs provided by industry and government organizations.
3. Observe the integrity monitor performance in a region characterized by severe terrain undulations and in the presence of known and unknown DEM error classes (including intentional horizontal and vertical offsets).
4. Obtain pilot feedback on loss-of-integrity alerts that are generated and presented in the flight deck.

Synthetic Vision (SV) Sensors

The SV Sensors element is responsible for defining the "research sensor suite" to support the NASA SVS. These systems include the weather (WX) radar, FLIR pod, ADS-B, and Traffic Alert and Collision Avoidance System (TCAS) hardware, along with the software modules and interfaces that will allow for the evaluation of the integrated NASA SVS.

The SV Sensors objectives are as follows:

1. Investigate the operational characteristics and compatibility of SV Sensor technologies to provide terrain and obstacle information in air-to-air, air-to-ground, ground-to-ground, and ground-to-air flight phases.

2. Assess the performance of SV Sensor technologies and their ability to supplement the SVS concept.

3.3 Program Hierarchy (Levels I, II, III, IV)

The SVS Project (see Reference 1) is structured as shown in Figure 3.2. Note: the General Aviation sub-element of the project is not participating in the testing described in this document.

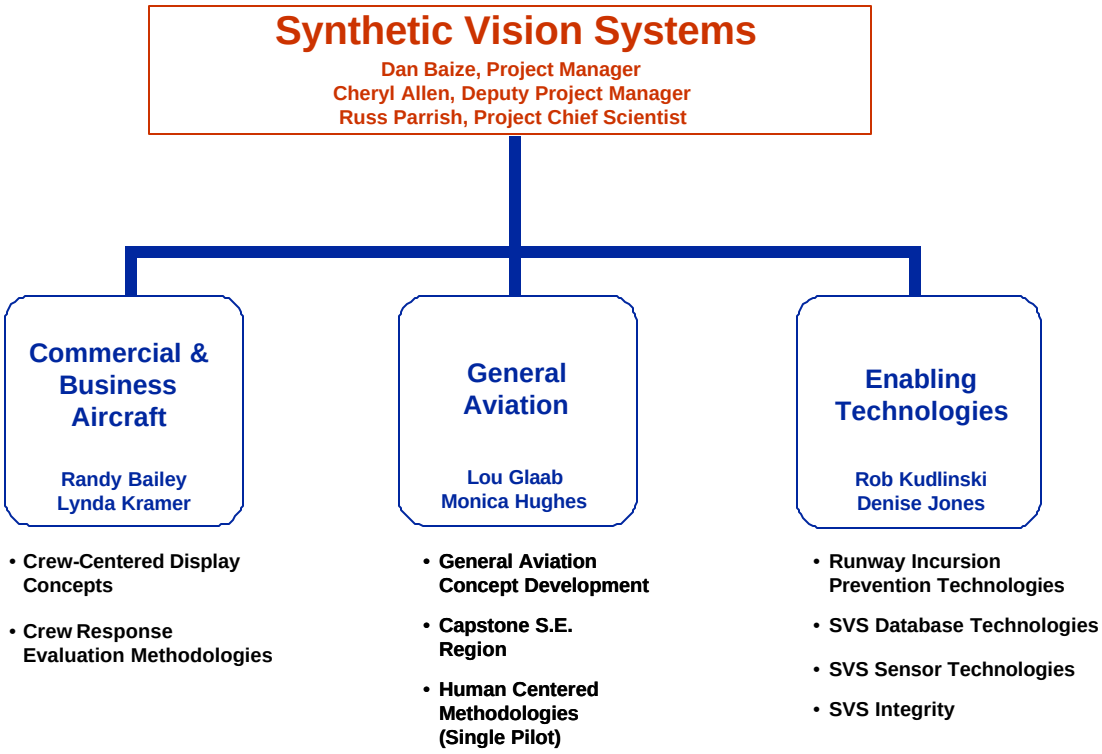

Figure 3.2. SVS Work Breakdown Structure

3.4 Requested Facilities

3.4.1 Aircraft

The NASA LaRC B-757 ARIES aircraft is required to support the flight-test objectives described in this document. Several capabilities are envisioned for incorporation of synthetic vision systems for flight-testing in the NASA LaRC ARIES aircraft that would have direct applications to current and future transport aircraft.

In addition, this flight project requires the use of other LaRC aircraft equipped with ADS-B to enable testing of RIPS functions. These aircraft will also serve to test SV

Sensors object detection algorithms. At least one ADS-B equipped aircraft is required for both airports (WAL and RNO). The B-200 is requested for RNO and WAL. The C-206 is requested for WAL, if available. See Section 7 for more details.

3.4.2 Ground-based Facilities

The Flight Systems Integration Lab (FSIL) and/or the Research System Integration Laboratory (RSIL) are required to validate the experimental systems. By simulating the aircraft systems in flight conditions, data passing through the network devices can be monitored, verifying that the test system and data collection is functioning properly. The Integration Flight Deck (IFD) is required for pre-flight development efforts and for pilot training and familiarization.

3.5 Key Program/Research Personnel

Table 3.1. Key Personnel

Name	Org	Task	Phone	Email
Mike Norman	Boeing	Flight Research Coordinator	757.864.6655	r.m.norman@larc.nasa.gov
Randy Bailey	NASA	NASA SVS Principal Investigator	757.864.8682	r.e.bailey@larc.nasa.gov
Lynda Kramer, Trey Arthur	NASA, NASA	SVDC Lead Researcher(s)	757.864.8146 757.864.6609	l.j.kramer@larc.nasa.gov j.j.arthur@larc.nasa.gov
Tim Etherington	Rockwell Collins	Rockwell Collins Lead Researcher	319.295.5233 319.431.7154	tjetheri@collins.rockwell.com
Dave McKay	BAE Systems	BAE Systems Lead Researcher	613.592.7400, ext 2522	Dave.Mckay@cmcelectronics.ca
Denise Jones	NASA	RIPS Lead Researcher	757.864.2006	denise.r.jones@larc.nasa.gov
Steven Harrah	NASA	SV Sensors Lead Researcher	757.864.1805	s.d.harrah@larc.nasa.gov
Steve Young, Maarten Uijt de Haag	NASA, Ohio Univ.	DIME Lead Researcher(s)	757.864.1709 740.593.9562	s.d.young@larc.nasa.gov uijtdeha@ohiou.edu
Harry Verstynen	NASA	Project Pilot	757.864.3873	h.a.verstynen@larc.nasa.gov

3.6 Milestones

Level 1 Milestone (see Reference 3):

3/03 Simulations & Flight Test Evaluations of Safety-Improvement Systems Within AvSP Complete

Level II Milestones (see Reference 1):
6/03 SVS Concepts Initial Flight Evaluation

Level III Milestones (see Reference 1 and 2):
12/02 Initial Integrated Retrofit Tactical and Strategic Concept for Surface Ops
3/03 Phase III Review of Industry Concepts
9/03 Integrated Retrofit Tactical & Strategic Concepts
12/02 Integrated Databases Developed for Initial SVS Flight Evaluations
9/02 Complete Simulation Evaluations of Database Integrity Monitoring Algorithms:
3/03 Initial Flight Evaluation of Integrated Runway Incursion Prevention and Database Integrity Monitoring Concepts

3.7 Proposed Schedule

A minimum of 70 flight-hours test program is identified herein starting no earlier than February 2003.

Flight operations requirements are given in Section 7.

3.8 Requirements Preamble

Requirements for this program are presented in Sections 4, 5, 6, and 7. For the remainder of this document, requirements are separated from the text by sequential enumeration for ease of reference during design reviews (e.g., 4-1 is the first requirement in Section 4).

In each of these sections, “shall” indicates a feature that is required, “should” expresses a recommendation, “may” provides a permission, and “will” indicates something that is part of the system but is not a requirement for a potential developer.

These requirements have been written for NASA internal use in order to implement the proposed systems on NASA research aircraft. Specifically, requirements for systems provided by the research team are not described; however, requirements for how to implement these systems onto the aircraft are described.

4. HARDWARE REQUIREMENTS

This section describes hardware requirements to implement the three SV systems and four SV component technologies on ARIES. Each of these elements has unique research objectives and as such, hardware requirements will be described separately.

Figure 4.1 provides a block diagram of the key hardware elements and interconnections needed on ARIES to enable the flight test. Note: Figure 4.1 should not be used as a sole reference for deriving requirements or an implementation. Table 4.1 and Sections 4.1 to 4.7 are the primary references to be used for these activities.

4-1. The hardware elements listed in Table 4.1 have been identified as being required for research objectives and they shall be installed as presented herein and maintained. Note: Flight spares may be provided for hardware elements listed in Table 4.1.

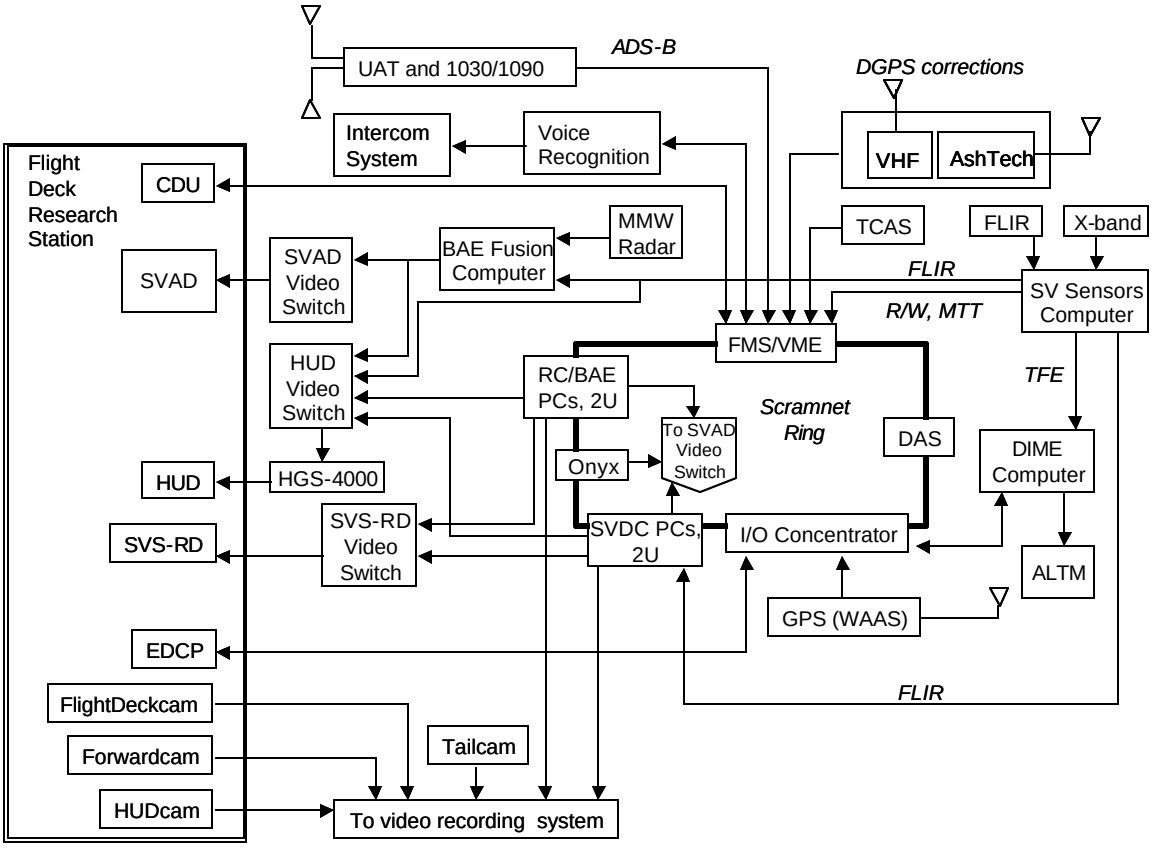

Figure 4.1. Key Hardware Elements and Interconnections for ARIES

Table 4.1. Required Hardware Elements

Device Name	Function	Provider/Contact
SVS		

Device Name	Function	Provider/Contact
SVS-RD	Research display (for tactical and strategic head-down concepts)	NASA/Bailey
EDCP	Accepts pilots inputs directed to the EMM and HUD (backup to VRS)	NASA/Existing
HUD	Head-Up display, including HGS-4000 computer, Pilot Display Unit and associated electronics and hardware.	NASA/Existing
SVAD	Research display	NASA/SDB or Bailey
Voice Recognition System	Pilot input device	NASA/Bailey
SVDC		
6 Zx10 computers	Inputs to research displays	NASA/Arthur
2 2U rack computers	Display control/Data recording/symbology overlay for FLIR	NASA/Arthur
10 VDA	Video distribution amplifiers	NASA/Arthur
2 KVM	Keyboard/Video/Mouse control for Zx10s and 2U computers	NASA/Arthur
8 Video switches	Researcher control of video to display	NASA/Arthur
2 Folsom units	Scan convert computer video to RS343(HUD)	NASA/Arthur
2 SCRAMNet Quad switches		NASA/Arthur
2 Lightwave video extenders		NASA/Arthur
7 scan converter	Scan convert displays for ARIES video recording	NASA/Arthur
4 video repeater displays	Repeat Zx10 displays to pallet operator	NASA/Arthur
Video mixer	In event that SVRD does not take 2 video inputs	NASA/Arthur
2 Video mixers	May be needed to mix FLIR image with computer display	NASA/Arthur
Scan converter	May be needed to convert ARIES S-video to XGA for SVAD	NASA/Arthur
R-C		
BAE		
MMW radar & R/T		BAE
BAE Radar Image Processing computer	Fuses FLIR and MMW radar	BAE
BAE scan converter	Merlin RS-170 to RS-343 scan converter	NASA/Arthur
Crystal PC CS900	FLIR video interface	BAE
Radar Data Recording Unit	MMWR digital data recording	BAE

Device Name	Function	Provider/Contact
RIPS		
Onyx	RIPS system computer	NASA/Existing
WAAS receiver	Decode GPS corrected signal	NASA/Existing
WAAS antenna	Receive GPS corrected signal-in-space	NASA/Existing
AshTech receiver	Decode GPS signal	NASA/Existing
AshTech antenna	Receive GPS signal-in-space	NASA/Existing
VHF receiver	Decode AshTech GPS correction	NASA/Existing
VHF antenna	Receive AshTech GPS correction signal-in-space	NASA/Existing
UAT transceiver	Decode/Encode Automatic Dependent Surveillance – Broadcast (ADS-B) messages	NASA/Existing
UAT antenna	Receive/transmit ADS-B signal-in-space	NASA/Existing
1030/1090 transceiver	Decode/Encode Automatic Dependent Surveillance – Broadcast (ADS-B) messages	NASA/Existing
1030/1090 antenna	Receive/transmit ADS-B signal-in-space	NASA/Existing
SCRAMNet ring	Provide information exchange between the Onyx, SVS PC, the data links (FMS/VME), and the data recording system (DAS)	NASA/Existing
FMS	Flight management system	NASA/Existing
DAS	Record test data	NASA/Existing
I/O concentrator	Provide gateway to/from the SCRAMNet ring for GPS and other B-757 busses	NASA/Existing
DAT drive	Record playback data and install research software modifications on Onyx computer	NASA/Existing
Laptops (2)	RIPS operator interface to Onyx computer	NASA/Existing
DIME		
DIME computer	Computes integrity values, provides alerts to SVDC if integrity is degraded	OhioU/Maarten
DIME keyboard, monitor, and cursor control device (CCD)	Man-machine interface to DIME computer	TBD
Weather radar (WxR)	Scanning ranging sensor	NASA/Harrah
WxR interface unit	Isolates WxR from research system and provides ground clutter data to DIME computer	NASA/Harrah
WAAS receiver	Provides position data to DIME computer	NASA/Howell
KGPS receiver	Stores GPS data for post-flight production of kGPS solution	NASA/Howell
Wire Interface Unit (WIU)	Provides interface to ship's systems (IRUs and RAs) and to WAAS	NASA/Shelton?
ALTM sensor and rack	Captures and stores high-resolution terrain mapping data	NASA/Young

Device Name	Function	Provider/Contact
SV Sensors		
WXR-2100 Radar	Provide EVS Radar Applications AND Standard WX	NASA/Harrah
FLIR Pod	Provide LWIR, SWIR, and Visible-Band Imagery	NASA/Existing
FLIR Control Box	Provides switching and regulating of FLIR power and signals	NASA/Existing
2 Radar Computers	Radar set-up, recording, and produce engineering displays	NASA/Existing
2 FLIR Computers	FLIR set-up, recording, and produce engineering displays	NASA/Existing
RAID Storage (8-RHDD)	Storage of FLIR digital video	NASA/Existing
2 KVM Switch	Allow one keyboard for each System (Radar and FLIR)	NASA/Existing
Flat Panel Display (RADAR)	Display Radar Applications	NASA/Existing
Flat Panel Display (FLIR)	Display Radar Applications	NASA/Harrah
Scan Converter	Allow four images to be seen on the one FLIR Flat Panel Display	NASA/Harrah
3 S-VHS VCRs	Allow recording of NTCS FLIR imagery	NASA/Existing
Video switch	Allows selection of FLIR video for distribution	NASA/Existing
WXI-711	Provides repeat of cockpit WXI-711 display	NASA/Existing
GPS-LTC time code generator	Provides a GPS synchronized time code for video storage	NASA/Harrah
3 LTC-VITC translator	Translates LTC into VITC for video storage	NASA/Existing
ARINC 453 Iso Box	Isolates and relays ship's 453 data to research pallets/receivers	NASA/Existing
4 Fiber Optic Transceiver Modules		NASA/Harrah

4.1 Systems/subsystems

4.1.1 NASA SVS

The Synthetic Vision System concept, advocated by NASA and followed to varying degrees by its industry partners, integrates four component technologies (SVDC, DIME, RIPS, and SV Sensors) thereby providing pilots with high-integrity real-time geo-referenced information that improves situational awareness with respect to terrain, obstacles, traffic, and flight path. Figure 4.2 represents the top-level NASA SVS functional design to be implemented for this testing, including relevant elements provided by the industry partners, BAE Systems (BAE) and Rockwell Collins (R-C).

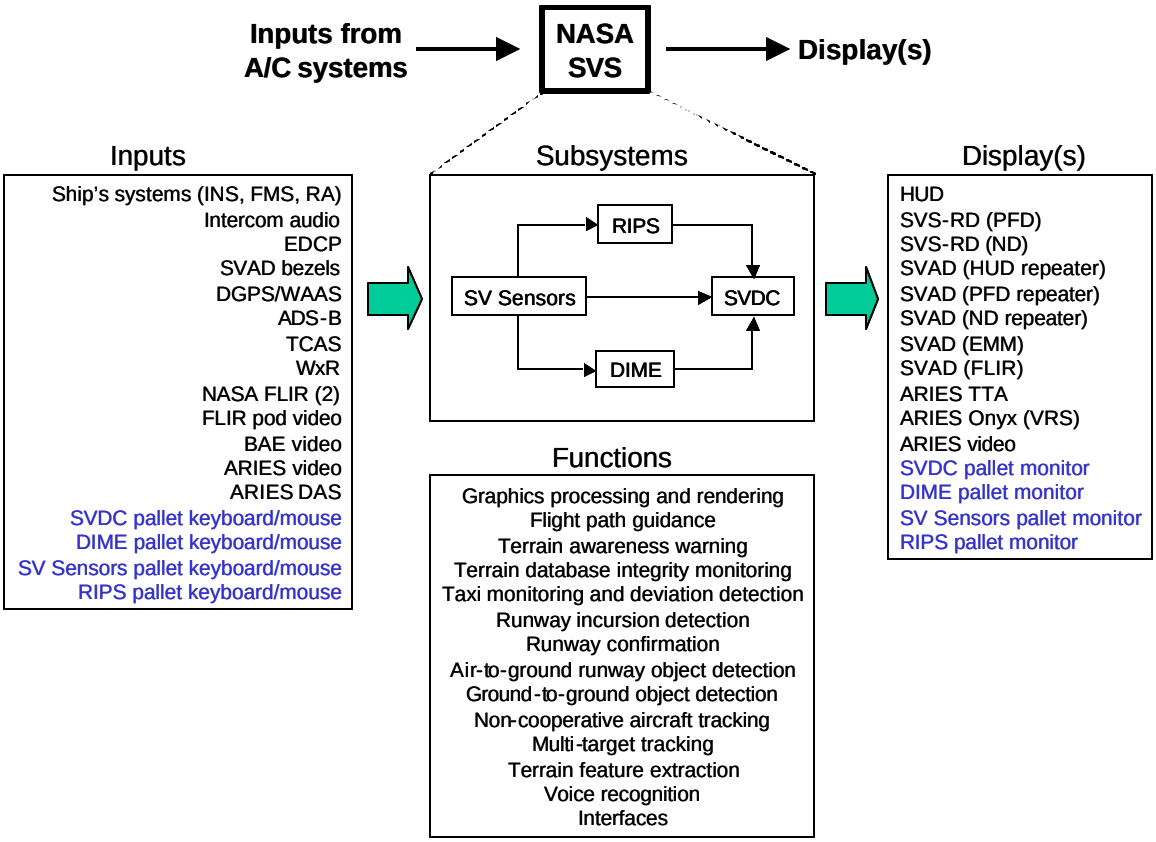

Figure 4.2. NASA SVS Top-Level Functional Design for RNO/WAL

4-2. To implement the NASA SVS, all hardware associated with the SVDC, DIME, RIPS, and SV Sensors component technologies shall be implemented as specified Sections 4.1.2, and 4.1.5-4.1.7.

4-3. Real-time precision aircraft positioning data shall be provided via Global Positioning System data with differential correction and inertial data blending. Differential ground stations shall be provided at the different flight test locations as identified in Section 7. Differential correction shall be provided at an update rate no less than 1 Hz, with inter-sample inertial correction at no less than 50 Hertz, with differential correction at ranges no less than 20 nm from the relevant runway threshold. The GPS and inertial blending algorithm shall have stability and accuracy commensurate to the accuracy of the input data with consistent as well as intermittent differential GPS corrections.

4-4. GPS data shall also be recorded to support post-processing that will result in no worse than 10 cm accuracy to evaluate the accuracy of the experimental navigation system.

4-5. The vision restriction device at the flight deck research station (FDRS) used at EGE shall be available for this flight test.

4-6. The ARIES HUD system (HGS4000 computer, HGS Control Panel, overhead projector, combiner glass, HUD camera, etc.) used at EGE shall be installed for this flight test.

4-7. A Synthetic Vision Auxiliary Display (SVAD) or displays shall be installed in the forward flight deck. The display implementation shall be designed to meet the following objectives:

a) to provide a display for the evaluation of the ability for a pilot not flying to integrate monitoring of sensor imagery with normal flight deck duties during approach (Note: The pilot referenced here will not be the safety pilot in the right seat.);

b) to provide an enhanced moving map display to provide crew coordination in the conduct of evaluations of surface operations (e.g., runway exit selection) using alternate modes of the Navigation Display (ND) while the EP has an ND approach mode; and

c) to provide an additional display for FLIR imagery evaluations during final approach and surface operations

A display implementation should be designed to meet the following objective if resources permit:

d) to provide a repeater of the Head-up display to assist in the interpretation of or to understand the EP comments from using the HUD, of which only the EP has a view from the cockpit.

4-8. The SVAD presentation to the jumpseat observer, if implemented, should be in a landscape format utilizing a 4:3 aspect ratio.

4-9. The SVAD presentation to the evaluation pilot should be in a landscape format utilizing a 4:3 aspect ratio.

4-10. A Voice Recognition System (VRS) shall be installed on the B757 for use as a pilot-vehicle interface in support of SVS display research. The VRS will be provided by the researchers.

4-11. A push-to-listen button accessible to the EP shall be provided to activate the VRS.

4-12. The Experimental Display Control Panel (EDCP) shall be installed. The EDCP may be used primarily or as a backup to the VRS to facilitate pilot control over the various research displays.

Block diagrams of the SVDC and BAE/Rockwell-Collins subsystems are shown in Figures 4.3-4.5. (Note: In these figures, a black box indicates existing equipment, a blue box indicates new equipment, and a dashed box indicates potentially-needed equipment).

4.1.2 SVDC

A simplified block diagram of the SVDC subsystem is shown in Figure 4.6.

4-13. The NASA-Synthetic Vision Display Concept (NASA-SVDC) requirements shall be provided by primarily locating all necessary equipment on a single research pallet, analogous to that flown for the SVS-EGE flight test.

4-14. The NASA-SVDC pallet shall contain three Zx10 computers to provide the primary computer graphics output from which to drive the SVS-Primary Flight Display (SVS-PFD), the SVS-Navigation Display (SVS-ND), and SVS-Head-Up-Display (SVS-HUD).

4-15. The simplified schematic diagram, shown in Figure 4.3 (with some details omitted for clarity), shall be used to implement the NASA SVS-PFD and SVS-ND display concepts. Modifications to the schematic to enhance implementation may be made upon mutual-agreement.

4-16. The SVS-PFD and SVS-ND shall be driven from separate computers since the integrated SVS display concepts will require terrain portrayal on both the PFD and ND which would unduly tax the computer graphics rendering of a single computer.

4-17. A new Synthetic Vision Systems-Research Display (SVS-RD) will be purchased, re-packaged as necessary (subject to the constraint that the new SVS-RD fits within the previously used SVS-RD exterior dimensions), and shall be installed in the FDRS analogous to how it has been flown previously. The display area of a new SVS-RD will consist of two separate LCD panels, each with at least XGA, 1024x768, resolution, closely abutted to give a seamless impression. If a suitable SVS-RD replacement cannot be found, video mixing shall be required to interface with the existing SVS-RD for concept implementation.

4-18. The NASA SVS-PFD and SVS-ND video shall be continually provided to the ARIES video system for distribution and recording (Section 4.7).

4-19. The SVS-PFD and SVS-ND shall be provided for display on the existing high-resolution flat panel displays in the Technology Transfer Area. The SVS-PFD and SVS-ND should be provided in their native resolutions to the Technology Transfer Area (See Display Requirements, Section 4.5).

4-20. Video switches shall be provided at the NASA research pallet to select the computer graphics input source for the SVS-RD PFD and ND (either R-C/BAE or NASA-SVDC).

4-21. The NASA-SVDC pallet shall contain a quad-switch SCRAMNet Interface to provide communication between the NASA Zx10 Personal Computers (PCs) and the SGI-Onyx computer on-board the ARIES (not shown in Figure 4.3). SCRAMNet data requirements are given in Section 5.2.

4-22. A 2U-sized PC computer shall be ruggedized and installed on the NASA-SVDC pallet. This ruggedized PC (see Figure 4.4) will be used for Graphical-User Interface (GUI) controls of the NASA Zx10 computers and direct PC data recording. The 2U computer shall be connected to the airplane's ethernet network.

4-23. All computers shall have switch-able keyboard, video, and mouse connections to allow researcher access to each of the four computers from one seat at the pallet.

4-24. All computers contained in the NASA-SVDC and R-C/BAE pallets shall be linked by Ethernet connection (not shown in Figures 4.3 or 4.4)

4-25. Any computer in either the NASA-SVDC pallet or the R-C/BAE pallet shall be able to connect (via Ethernet) to any other computer in the two pallets.

4-26. The schematic diagram, shown in Figure 4.5 (with some details omitted for clarity), shall be used to implement the NASA SVS-HUD display concepts. Modifications to the schematic to enhance implementation may be made upon mutual-agreement.

4-27. One Zx10 PC on the NASA-SVDC pallet shall be used to generate raster and raster symbology for NASA's SVS-HUD concept as a raster input, through a Folsom scan converter, to the HGS-4000 Head-Up Display. This PC shall also be used to control the Folsom via RS-232 serial line for proper scan conversion of the input source and output.

4-28. The NASA SVS-HUD shall be continually provided to the ARIES video system for distribution and recording.

4-29. Video switches shall be provided at the NASA research pallet to select the computer graphics input source for the Folsom (either R-C/BAE Zx10 HUD or NASA-SVDC HUD).

4-30. Further, the capability to switch the input source to the HGS-4000 raster input shall be provided at the NASA pallet. This switch may be made by either a BNC connector change or through a video switching unit. The input source to the HGS-4000 shall either be an RS-343 format FLIR signal from the SV Sensors pallet, the output of the Folsom scan converter at the NASA-SVDC pallet, or the converted RS-343 output of the BAE image fusion processor (see Section 4.1.3).

4-31. The video input to the Folsom, for mixing with the 2U Rack computer graphics should be switch-able at the NASA pallet between the BAE image fusion output and the SV Sensors NASA FLIR-only video available at the NASA pallet.

4-32. The video source available to the SVAD as a result of this mixing shall be available for video recording and distribution throughout ARIES and shall also be available for display at the R-C/BAE pallet.

4-33. The SVAD shall have available for selection the requisite number of video sources required to meet 4-7. Source selection shall be available in the Forward Flight deck.

4-34. The other SVAD video source shall include, as a minimum, the EMM (RIPS) display generated by the SGI-Onyx computer (see Section 5.1.1). Other video sources may also be provided subject to resource availability and INSITE researcher priorities.

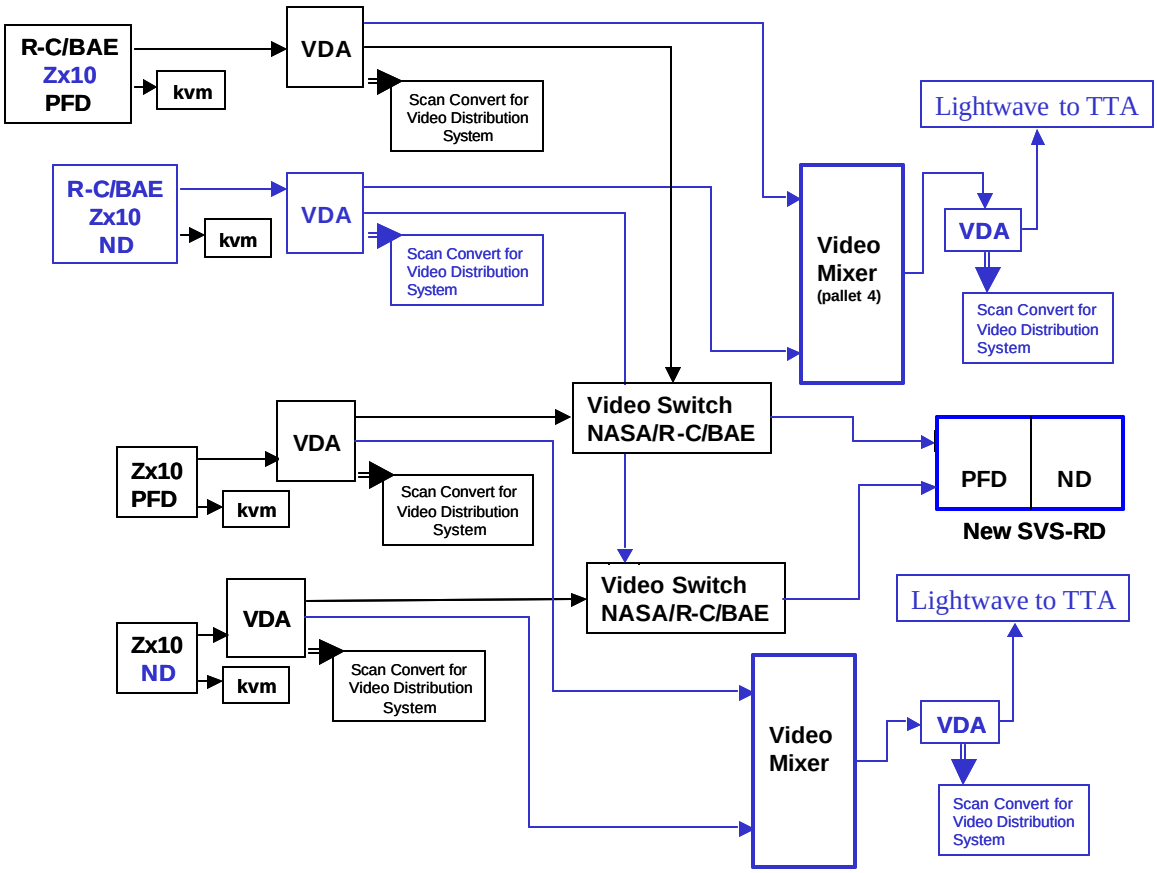

Figure 4.3. SVS-PFD and SVS-ND Display Concept Schematic Diagram

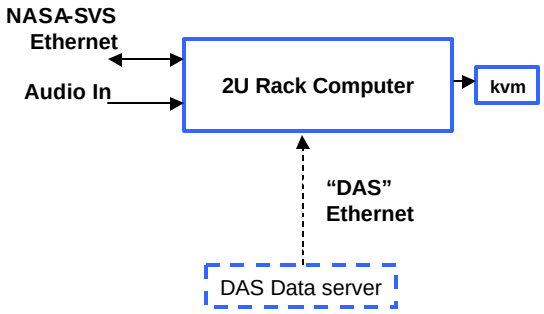

Figure 4.4. 2U PC Computer NASA-SVDC Concept Schematic Diagram

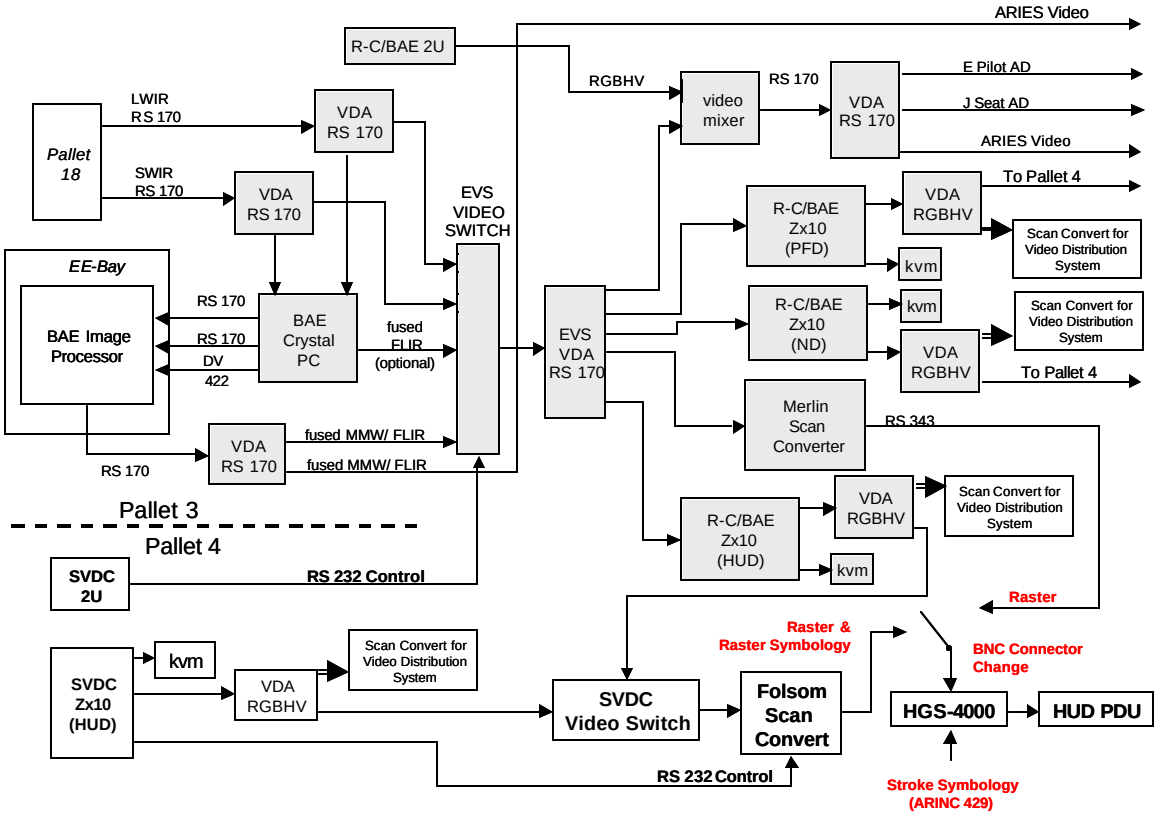

Figure 4.5. SV-HUD Concept Schematic Diagram

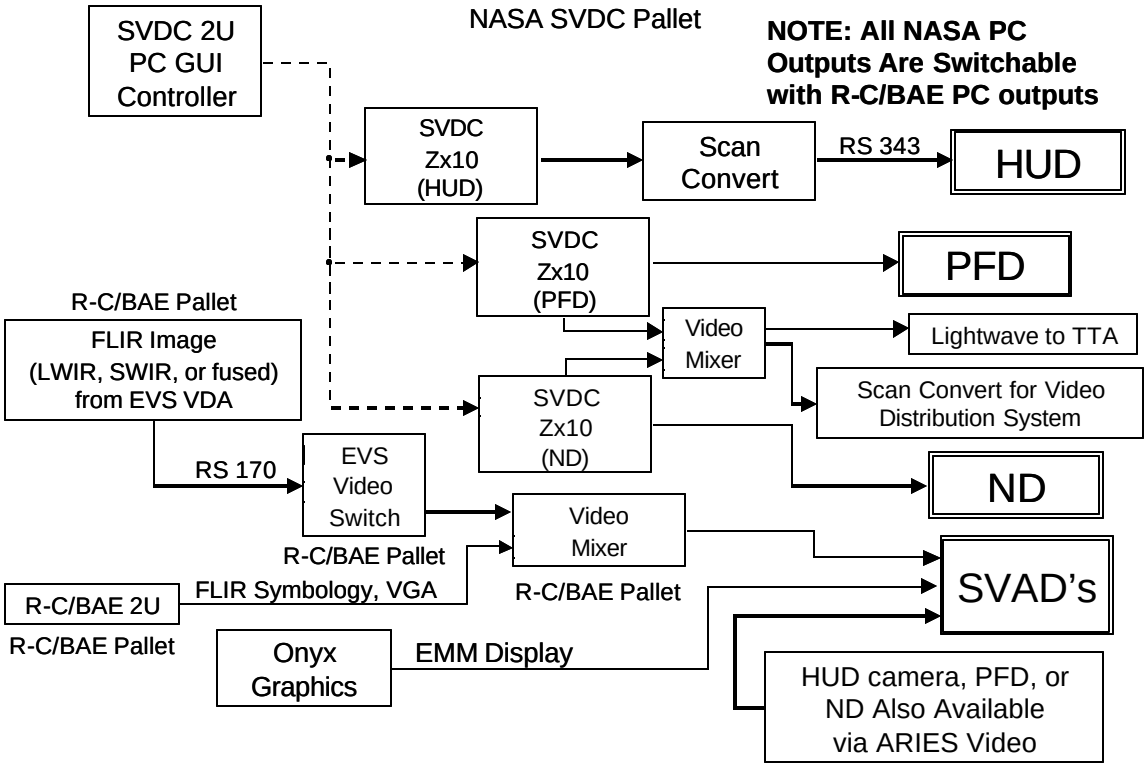

Figure 4.6. SVDC Subsystem

4.1.3 BAE Systems SVS

A simplified block diagram of the BAE subsystem is shown in Figure 4.7.

4-35. The BAE System SVS requirements shall be met by primarily locating all necessary equipment on a single research pallet, combined with R-C pallet requirements, analogous to that flown for the SVS-EGE flight test.

4-36. The R-C/BAE pallet shall contain three Zx10 computers to provide the primary computer graphics output from which to drive the Primary Flight Display (R-C/BAE-PFD), the Navigation Display (R-C/BAE-ND), and Head-Up-Display (R-C/BAE-HUD). In the BAE concept, raster symbology is not required for the HUD and so only 2 of the 3 Zx10s are utilized. The Zx10 computers may have removable or separate hard disks to facilitate transition and partitioning between the two CRA partners.

4-37. The simplified schematic diagram, shown in Figure 4.3 (details omitted for clarity), shall be used to implement the R-C/BAE PFD and ND display concepts. Modifications to the schematic to enhance implementation may be made upon mutual-agreement.

4-38. The R-C/BAE-PFD and R-C/BAE-ND shall be driven from separate computers and presented on the new SVS-RD, if installed.

4-39. The R-C/BAE-PFD and R-C/BAE-ND shall always be provided to the ARIES video system for distribution and recording (Section 4.7).

4-40. The R-C/BAE-PFD and R-C/BAE-ND shall be provided for display on the existing high-resolution flat panel displays in the Technology Transfer Area. The R-C/BAE-PFD and R-C/BAE-ND should be provided in their native resolutions to the Technology Transfer Area (See Display Requirements, Section 4.5).

4-41. A BAE Radar Imaging Processing Computer shall be installed for the flight test. See Reference 7.

4-42. If radar altitude is not available over the ARINC 429 channel, then the radar altitude data shall come from the Radar Altimeter (analog option). If the analog option is used, then the following range/resolution based upon radar altitude (see reference 7) shall be used:

For altitudes 0 to 480 ft, Vo = 0.02 x (H + 20)
where: Vo = dc analog voltage output in volts
0.02 = dc voltage per foot of altitude
H = altitude in feet
20 = altitude in feet at 0 ft altitude indication (-20 ft = 0.0 VDC)

For altitudes 480 ft to 2500 ft, Vo = 10 x ln(H + 20) - 52.1461
where: ln = natural logarithm

4-43. In addition to the Zx10 computers on the R-C/BAE pallet, the following equipment as specified in Reference 7 shall be installed:

- Crystal PC CS900 Industrial computer chassis; - takes up 1/2 of 19 rackmount tray in width, 17" of rack space (in height), has 8 PCI slots. (http://www.crystalpc.com/products/computers/cs900.asp)

  - Single Board Computer for above, e.g. Crystal Flex370 BX, comes with 500-MHz to 1 GHz PIII, VGA, Ethernet, Ultra2-Wide SCSI, IDE, USB. (http://www.crystalpc.com/products/computers/cpucards.asp)
  - Digital RADAR data acquisition over RS422 via Matrox Genesis card (http://www.matrox.com/imaging/products/genesis/home.cfm)
  - ARINC 429 card (SBS tech or Condor) for ARINC 429 acquisition (http://209.85.191.212/computer/products/product-details.asp)
  - GPS card and Brandywine Communication time card for timestamping of data

- Radar Data Recording Unit – 19in rack mounted 14” high, 20” in deep (approx), contains multiple removable hard drives
- Merlin scan converter

4-44. A BAE Millimeter Wave Radar (MMWR) shall be installed on the weather radar pedestal bulkhead. Refer to Reference 6. This installation should not interfere mechanically with either the present ILS antennas or the X-Band weather radar installed on ARIES.

A new radome, with X-Band and MMWR transmissivity characteristics, will be provided for installation. This radome will be flight-qualified by its manufacturer.

4-45. FLIR and MMWR signal routing shall be provided in accordance with the schematic diagram of Figures 4.5 and 4.7.

4-46. The schematic diagram, shown in Figure 4.5 (with some details omitted for clarity), shall be used to implement the BAE SVS-HUD display concept. Modifications to the schematic to enhance implementation may be made upon mutual-agreement.

4-47. The BAE SVS-HUD concept will be created by fusion of MMWR and FLIR sensor inputs. This fused imagery shall be provided for display on the R-C/BAE pallet, as the raster input source to the HGS-4000 computer, and on the ARIES video distribution and recording system. Scan conversion of the fusion RS-170 video to an RS-343 format shall be provided before routing to the HGS-4000 computer.

4-48. A 2U-sized PC computer shall be ruggedized and installed on the R-C/BAE pallet.

4-49. The simplified schematic diagram, shown in Figure 4.8 (with details omitted for clarity), shall be used to implement the Synthetic Vision Auxiliary Display (SVAD) concepts.

4-50. The 2U-sized Rack Computer shall generate computer graphics for combination with a video signal by a video mixing unit.

4-51. The R-C/BAE pallet shall contain a quad-switch SCRAMNet Interface to provide communication between the Zx10 PCs and the SGI-Onyx computer on-board the ARIES (not shown in Figure 4.3). SCRAMNet data requirements are given in Section 5.2.

4-52. All computers shall have switch-able keyboard, video, and mouse connections to allow researcher access to each of the four computers from one location at the pallet.

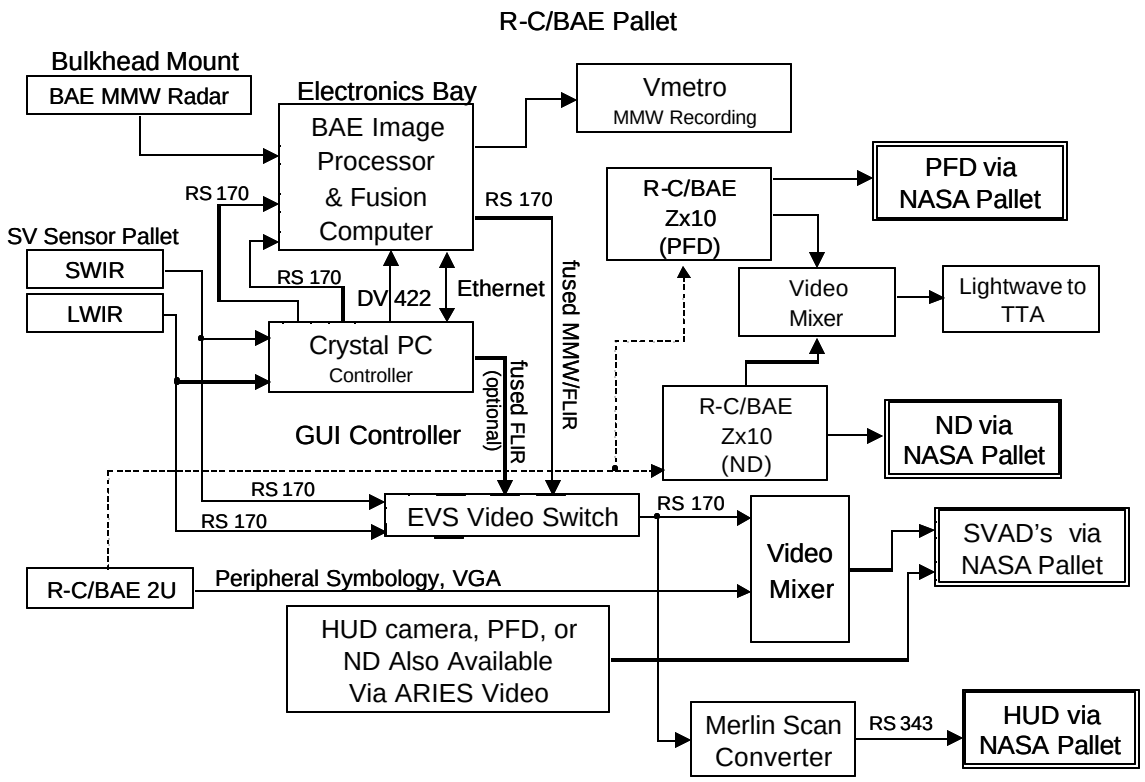

Figure 4.7. BAE Subsystem

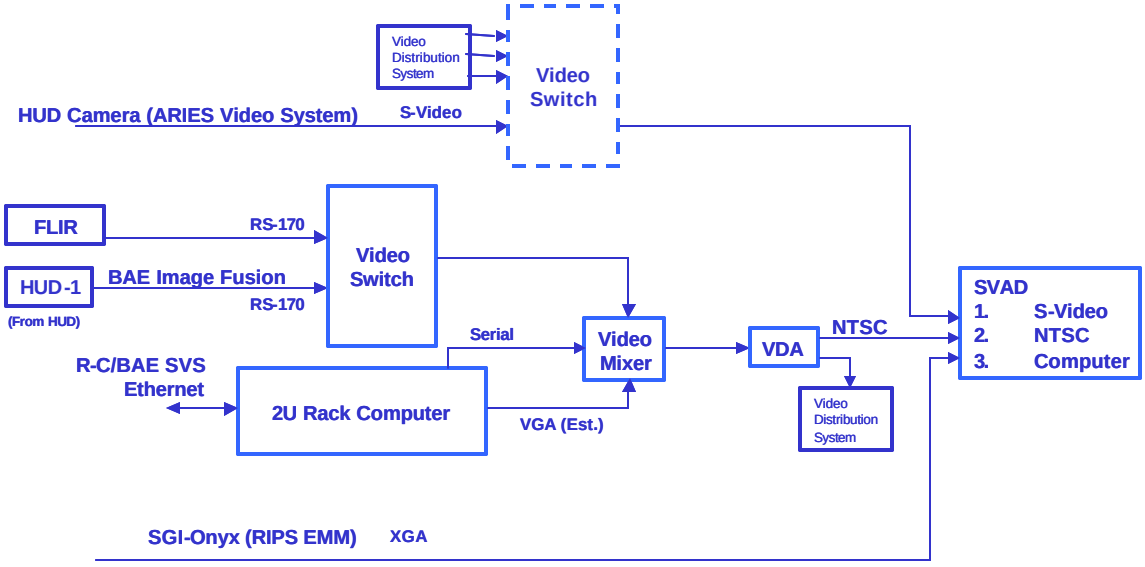

Figure 4.8. SVAD Concept Schematic Diagram

4.1.4 Rockwell Collins SVS

A simplified block diagram of the R-C subsystem is shown in Figure 4.9.

4-53. The Rockwell Collins SVS requirements shall be met by primarily locating all necessary equipment on a single research pallet, combined with BAE pallet requirements, analogous to that flown for the SVS-EGE flight test.

R-C SVS requirements will principally be met by implementation of requirements already specified for NASA and BAE Systems SVS in Section 4.1.2 and Section 4.1.3, respectively.

4-54. R-C/BAE Zx10 HUD computer graphics shall be mixed with NASA FLIR in a RS-343 format and shall be distributed for recording, display at the pallet, and as a raster input for the HGS-4000.

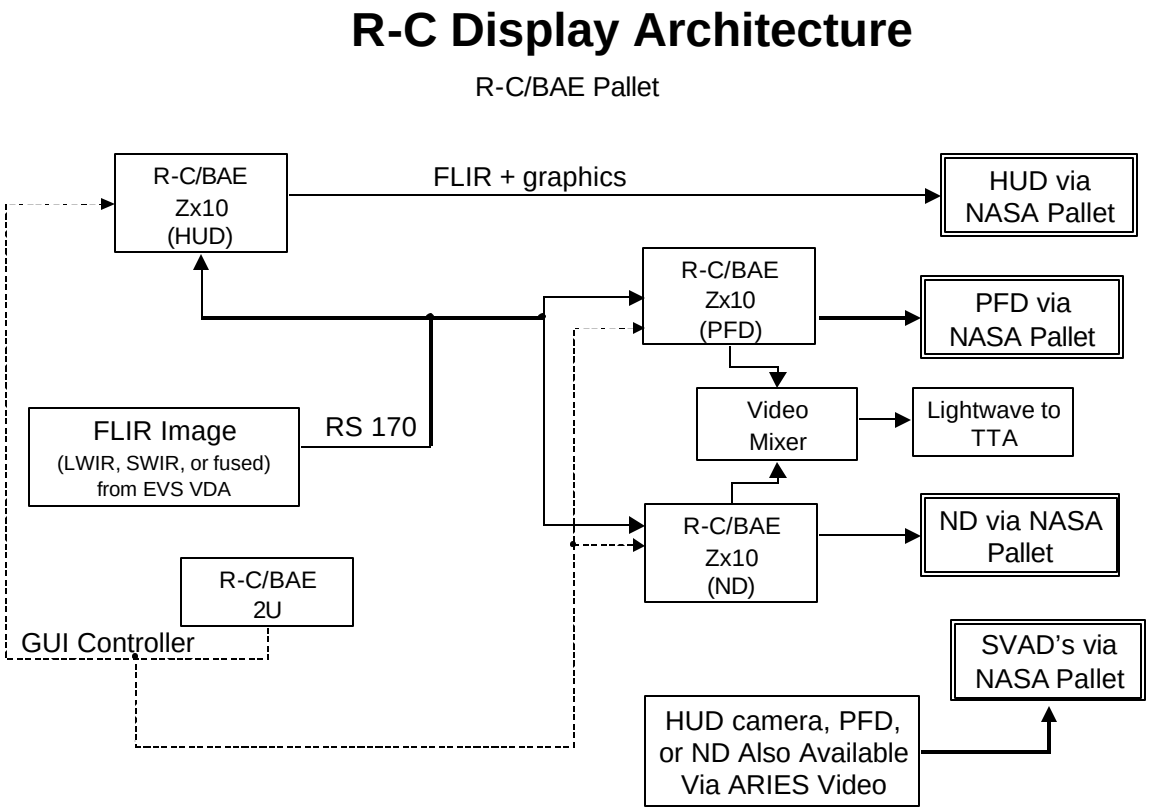

Figure 4.9. R-C Subsystem

4.1.5 RIPS

A block diagram of the RIPS system is shown in Figure 4.10.

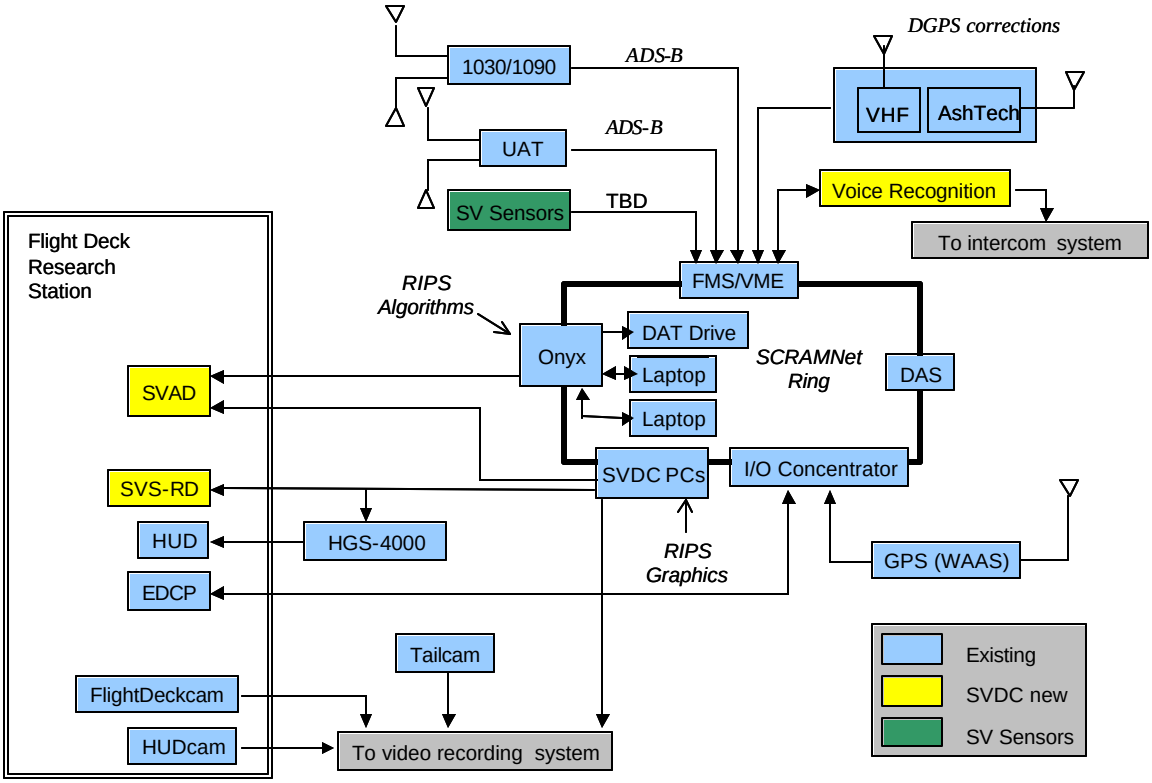

Figure 4.10. RIPS Hardware Architecture

4-55. ADS-B messages shall be transmitted and received via both UAT and 1030/1090 data links.

4-56. The EDCP shall be used to provide pilot inputs to the RIPS. An interchangeable faceplate for the EDCP shall be installed with the labels shown in Figure 4.11 cut into the plate and backlit (see note). The baseline button labels shall not be displayed when the EMM is enabled. Since the baseline buttons labeled F/D, STAR, WXR, and TNAV currently serve no function, these button labels shall not be displayed at any time. Requirements 4-57 to 4-62 pertain to the EDCP.

Note: Figure 4.11 shows the panel layout used for the March 2002 RIPS simulation. Labeling changes may be made based on simulation results and SVS integration. Changes, if required, will be determined at a later date. New faceplates would have to be fabricated.

4-57. The button light bar shall be illuminated for the following buttons indicating the corresponding function is enabled: RI, PLAN, LAHSO, EMM, ATC, OBST, and TERR.

4-58. The button light bar shall not be used for the following buttons: EX/NXT, EX/PRV, ATC/UP, ATC/DN, TAG, SNAP, and DCLTR.

4-59. When the EMM mode is disabled, the left knob positions shall retain their baseline functionality.

4-60. When the EMM mode is enabled, rotating the left knob shall change the scale of the EMM as follows: 5- zoom level 5x, 10- zoom level 4x, 20- zoom level 3x, 40- zoom level 2x, 80- zoom level 1x, 160- zoom level 5NM, 320- zoom level OVR.

4-61. All positions on the right knob shall maintain baseline functionality. Note: If the EDCP is used as a backup to the VRS, this knob shall be used for selection of field of view on the PFD.

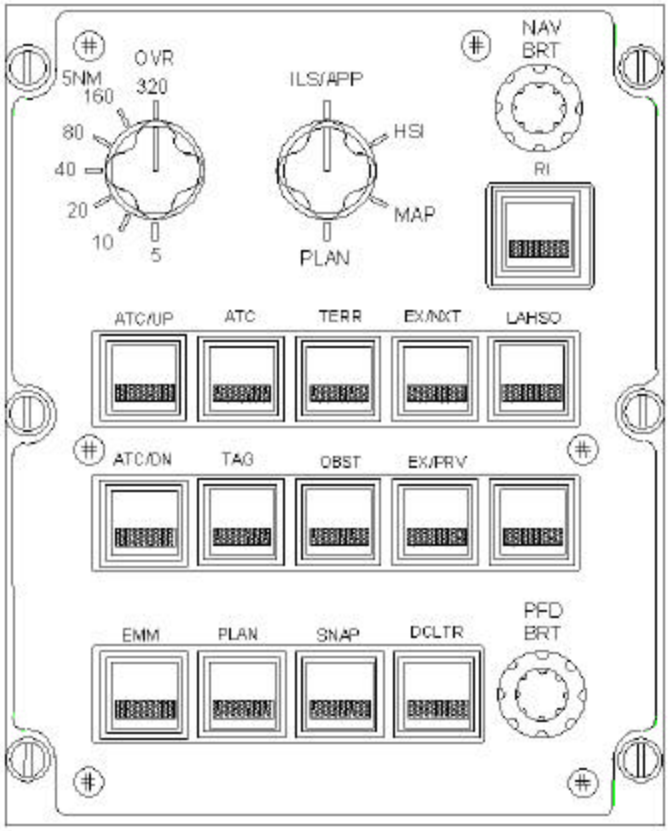

Figure 4.11. EDCP Panel Layout

4.1.6 SV Sensors

A block diagram of the SV Sensors subsystem is shown in Figure 4.12.

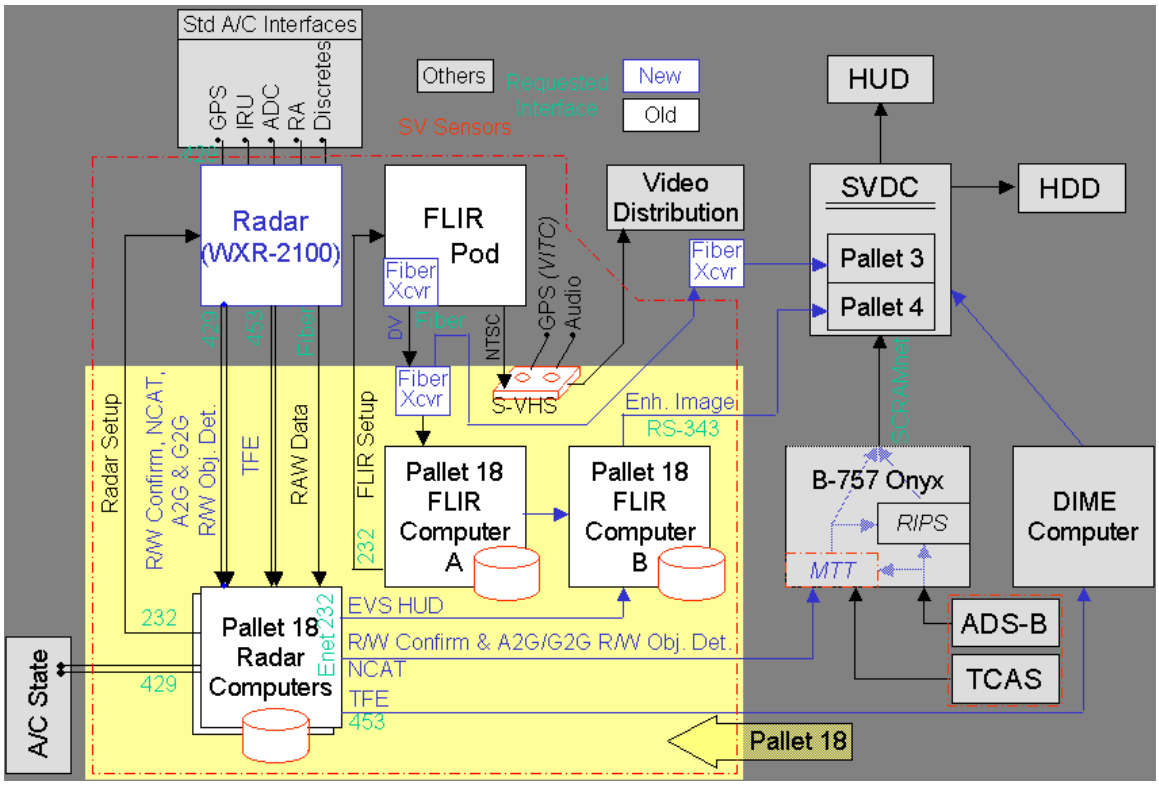

Figure 4.12. Synthetic Vision Sensors Hardware Architecture

4-62. A new radar transceiver/antenna shall be installed as a direct replacement of the current research radar/antenna. No wiring changes are expected between the radar and Pallet 18.

4-63. Changes to the existing wiring in Pallet 18 and the addition of wiring from Pallet 18 to the ARIES Onyx, DIME, R-C/BAE, and SVDC computers shall be made in accordance with Figure 4.12.

4-64. The FLIR pod will be qualified for flight in expected icing conditions and shall be reinstalled with the addition of a fiber optics transceiver in the forward electronics bay and at Pallet 18.

4-65. Additional wiring, along with a reconfiguration of the existing wiring, shall be done at Pallet 18 to support EVS displays for the HUD and/or head-down display (HDD).

4.1.7 DIME

A block diagram of the DIME system is shown in Figure 4.13. Note: Power interfaces are not shown.

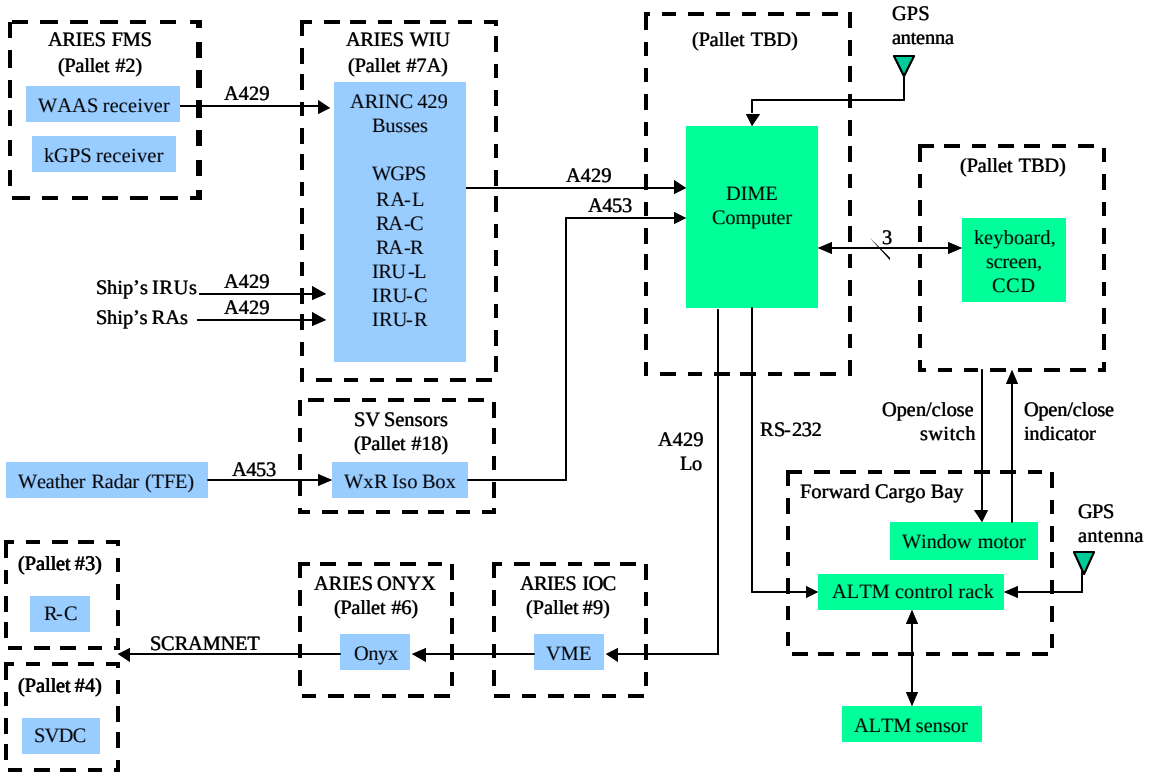

Figure 4.13. DIME Hardware Architecture

4-66. The DIME hardware elements listed in Table 4.1 shall be installed and maintained. Pictures, drawings, and specifications for all elements are available on request. Note: the components listed at Pallets 2 and 7A were previously flown for a DIME experiment at EGE; no change for these elements or their interfaces is required for this testing.

4-67. The interface shown in Figure 4.13 between the DIME computer and SVDC/R-C computers shall be constrained as follows: SVDC/R-C computers shall receive DIME data via SCRAMNet. The DIME computer shall produce data intended for SVDC/R-C computers via an A-429 output port. SDB is responsible for defining the intermediate system responsible for transferring this A-429 data onto the SCRAMNet. Specification of this data is available on request.

4-68. The Airborne Laser Terrain Mapping (ALTM) sensor unit should be installed such that the view-port is as close as practicable to aircraft centerline (buttline 0.0) and at a body station as close as practicable to that of the radar altimeter antennas. The actual location of the ALTM sensor and its associated GPS antenna, in aircraft coordinates (STA, BL, WL) within +/- 0.39 inches, shall be provided to the DIME researchers prior to the flight-testing accurate to 1 cm or better. The GPS antenna that is selected to interface with the ALTM shall be subject to manufacturer acceptability.

4-69. Mounting shall ensure that the ALTM scanning axis is coincident with the aircraft body roll axis to within less than one degree. The actual orientation of the ALTM sensor, with respect to the aircraft body axes, shall be provided to the DIME researchers prior to the flight-testing.

4-70. The ALTM view-port should be designed with the following considerations:

a. Maximum azimuth scanning range for the ALTM is +/- 20 degrees; a view-port design that results in less than +/- 20 degrees scanning range may be acceptable contingent on approval by the DIME lead researcher;

b. Although desirable, it is not required that the view-port size accommodate the ALTM video camera lens;

c. If the ALTM view-port design includes a window that the laser must pass through while activated, a window/glass material shall be selected that ensures adequate transmissivity of the laser energy.

d. If a motorized shutter is implemented to protect the glass during runway operations and/or inclement weather, a shutter control mechanism (e.g. switch) and shutter position indicator (e.g. open/closed LED) shall be provided at the pallet hosting the DIME computer keyboard, mouse, and monitor.

4-71. The ALTM 8-mm tape drive should be accessible during flights; however, it is anticipated that the installation design for the computer rack that hosts the tape drive may call for installation in the cargo area beneath the cabin. This is an acceptable alternative assuming the tape drive is accessible within 30 minutes before and after flights in order to change tapes.

4-72. A bi-static GPS system, including top and bottom mounted antennae, should be installed. This unit is not part of the operational real-time DIME system but is being evaluated as a potential low-cost terrain-mapping sensor.

4.2 Provider(s)

Refer to Table 4.1.

4.3 Hardware Interfaces

Refer to Section 4.1.

4.3.1 Power

4-73. Power shall be provided to meet the operational requirements of each hardware element described in section 4.1.1-4.1.7.

4.3.2 Environmental

4-74. Environmental protection shall be provided for each hardware element described in section 4.1.1-4.1.7. This includes assuring that the equipment is operated in an environment consistent with manufacturer specifications for thermal, vibration, pressure, and EMI limits.

4.3.3 Structural

No additional requirements beyond basic aircraft.

4.3.4 Location

4-75. The NASA pallet and the R-C/BAE pallet shall be positioned as close to each other as feasible.

4.4 Measurements Requirements

4.4.1 Table of parameters, limits, units, accuracies, resolutions, and sample rates

4-76. The SCRAMNet parameters listed in Tables 4.2 and 4.3 and the ARINC 429 parameters listed in Tables 4.4, 4.5, and 4.6 shall be provided at the rates and resolutions listed.

4-77. The brightness and contrast control settings for the HGS-4000 shall be available at the SGI-Onyx for recording and real-time de-bugging.

4-78. The SCRAMNet parameters, Terrain Database Integrity and Terrain Database RMS, listed in Table 4.2 shall have the following attributes:

Parameter: Terrain Database Integrity
Desired Update Rate: 1 Hz
Acceptable Update Rate: 1 Hz
Type: Signed Integer
Range: -1 (Not Available), 0 (Nominal), +1 (Loss of Terrain Database Integrity)

Parameter: Terrain Database RMS
Desired Update Rate: 1 Hz
Acceptable Update Rate: 1 Hz
Type: Float
Range: >0
Units: meters-squared
Desired Resolution: 0.01 meters-squared
Acceptable Resolution: 0.1 meters-squared

Table 4.2. SCRAMNet Requirements for SVDC

Parameter	Des. Update Rate	Accept. Update Rate	Desired Res.	Accept. Res.
Display Parameters				
Aircraft Angle of Attack, Degs	>60Hz	>30Hz	<.05°	<.1°
Aircraft Sideslip Angle, Degs	>60Hz	>30Hz	<.05°	<.1°
Aircraft Flight Path Angle, Degs	>60Hz	>30Hz	<.05°	<.1°
Aircraft Ground Speed, kts	>10Hz	>5Hz	<.5 kts	<1.0kts
Aircraft Indicated Airspeed, kts	>10Hz	>5Hz	<0.5 kts	<1.0kts

Parameter	Des. Update Rate	Accept. Update Rate	Desired Res.	Accept. Res.
Aircraft Indicated Airspeed Rate	>10Hz	>5Hz		
Aircraft Landing Capabilities (Cat I, etc.)				
Aircraft Longitudinal acceleration along flight path, G's	>10Hz	>5Hz	<0.01G's	<0.02G's
Aircraft Magnetic Heading, Degs	>60Hz	>30Hz	<.05°	<.1°
Aircraft True Heading, Degs	>60Hz	>30Hz	<.05°	<.1°
Aircraft Magnetic Track Angle, Degs	>60Hz	>30Hz	<0.05°	<0.1°
Aircraft True Track Angle, Degs	>60Hz	>30Hz	<0.05°	<0.1°
Aircraft Pressure Altitude, ft	>10Hz	>5Hz	<5ft	<10ft
Aircraft Radio Altimeter Altitude, ft	>10Hz	>5Hz	<5ft	<10ft
Aircraft True Airspeed, kts	>10Hz	>5Hz	<0.5 kts	<1.0kts
Aircraft Vertical Speed, ft/min	>10Hz	>5Hz	<1ft/min	<2ft/min
Aircraft VF (Max flap speed), kts	>10Hz	>5Hz	<.5 kts	<1.0kts
Aircraft Vmin (Min approach speed), kts	>10Hz	>5Hz	<.5 kts	<1.0kts
Aircraft VNE (Never exceed speed), kts	>10Hz	>5Hz	<.5 kts	<1.0kts
Aircraft VR (Takeoff Rotate speed), kts	>10Hz	>5Hz	<.5 kts	<1.0kts
Aircraft VS (Stall speed), kts	>10Hz	>5Hz	<.5 kts	<1.0kts
Aircraft V1 (Takeoff decision speed), kts	>10Hz	>5Hz	<.5 kts	<1.0kts
Aircraft V2 (Takeoff safety speed), kts	>10Hz	>5Hz	<.5 kts	<1.0kts
Baro Setting, In of Hg	>1Hz	>1Hz		
DME - Distance from Nav Device, nm	>10Hz	>5Hz	<0.1nm	<0.2nm
EDCP Parameters	>10Hz	>5Hz		
Flap Status, Degs	>1Hz	>1Hz		
Ship-System:				
Flight Director (FD) Status				
FD Acceleration Command				
FD Pitch Command (Degs)				
FD Roll Command (Degs)				
FD Speed Command (kts)				
FD Yaw Command (Degs)				
Experimental System:				
Flight Director (FD) Status				
FD Acceleration Command				

Parameter	Des. Update Rate	Accept. Update Rate	Desired Res.	Accept. Res.
FD Pitch Command (Degs)				
FD Roll Co mmand (Degs)				
FD Speed Command (kts)				
FD Yaw Command (Degs)				
FMS Flight Plan Next waypoint name	>2Hz	>1Hz		
FMS Flight Plan distance to next waypoint	>2Hz	>1Hz	<0.1nm	<0.2nm
Vertical deviation from FMS Flight Plan, % scale	>2Hz	>1Hz	<1%	<2%
Lateral deviation from FMS Flight Plan, % scale	>2Hz	>1Hz	<1%	<2%
FMS status	>2Hz	>1Hz		
G-Load, G's	>10Hz	>5Hz	<0.01G's	<0.02G's
HUD Brightness Control - Symbology	>10Hz	>5Hz		
HUD Brightness Control - Raster	>10Hz	>5Hz		
HUD Declutter Button	>10Hz	>5Hz		
ILS Glideslope Error, dots	>10HZ	>5HZ	<0.01 dots	<0.1dots
ILS Glideslope Validity	>10Hz	>5Hz		
ILS Localizer Error, dots	>10HZ	>5HZ	<0.01 dots	<0.1 dots
ILS Localizer Validity	>10Hz	>5Hz		
Mach Number	>10Hz	>5Hz	<0.001	<0.1
Prevailing Wind Direction at Aircraft Altitude, Degs	>2Hz	>1Hz	<1°	<2°
Prevailing Wind Magnitude at Aircraft Altitude, kts	>2Hz	>1Hz	<.5 kts	<1.0kts
Sideslip Angle, Degs	>60Hz	>30Hz	<0.5°	<0.1°
TCAS Data within 100nm Range, Bearing, and Altitude, ft, degs, ft	>2Hz	>1Hz	<.05° error at 1nm	<.1° at 1nm
Terrain Data Base Drive Parameters				
Aircraft Heading, Degs	>60Hz	>30Hz	<.05°	<.1°
Aircraft Pitch Attitude, Degs	>60Hz	>30Hz	<.05°	<.1°
Aircraft Roll Angle, Degs	>60Hz	>30Hz	<.05°	<.1°
Aircraft Latitude, Decimal Degs	>60Hz	>30Hz	< 5ft	< 10ft

Parameter	Des. Update Rate	Accept. Update Rate	Desired Res.	Accept. Res.
(WGS-84)				
Aircraft Longitude, Decimal Degs (WGS-84)	>60Hz	>30Hz	< 5ft	< 10ft
Aircraft GPS altitude above Mean Sea Level, ft (WGS-84)	>60Hz	>30Hz	<5ft	<10ft
Aircraft altitude (Geoid Ref), ft	>60Hz	>30Hz	<5ft	<10ft
Geometric Altitude				
Terrain Database Integrity (DIME)	1Hz	1Hz		
Terrain Database RMS	1Hz	1Hz	0.01 m^2	0.1 m^2
Autopilot Inputs				
Autopilot Speed Mode	>10Hz	>5Hz		
Autopilot LNAV Mode	>10Hz	>5Hz		
Autopilot VNAV Mode	>10Hz	>5Hz		
Decision Height Value (Minimum Decent Altitude), ft	>10Hz	>5Hz		
Decision Height Indicator When Reached	>10Hz	>5Hz		
Selected Altitude, ft	>10Hz	>5Hz		
Selected Course/Track	>10Hz	>5Hz		
Selected Heading, Degs	>10Hz	>5Hz		
Selected Indicated Air Speed, kts	>10Hz	>5Hz		
Selected Vertical Speed, ft/min	>10Hz	>5Hz		
Other Systems				
GPWS warning values	>10Hz	>5Hz		
UTC Time, second past GMT midnight	>10Hz	>5Hz		
Weight On Wheels	>10Hz	>5Hz		
Post Flight Data Analysis				
Local Pallet Event Marker Button	>10Hz	>5HZ		
Pilot's Longitudinal input	>10Hz	>5HZ	<.1%max	<.5%max
Pilot's Lateral Input	>10Hz	>5HZ	<.1%max	<.5%max

Parameter	Des. Update Rate	Accept. Update Rate	Desired Res.	Accept. Res.
Pilot's Directional Input	>10Hz	>5HZ	<.1%max	<.5%max
Pilot's Left Throttle Input	>10Hz	>5HZ	<.1%max	<.5%max
Pilot's Right Throttle Input	>10Hz	>5HZ	<.1%max	<.5%max
Pilot's Wheel/Columns push-button selection input	>10Hz	>5HZ		
Pitch Angle Rate, Deg/sec	>10Hz	>5HZ	<0.01	<0.1
Roll Angle Rate, Deg/sec	>10Hz	>5HZ	<0.01	<0.1
SVS Mode Command	>10Hz	>5HZ	<0.01	<0.1

Table 4.3. SCRAMNet Requirements for RIPS

Name	Type	Rate	Description
Aircraft parameters			
EDCPstateSVSRD	int	25 Hz	Pilot EDCP inputs to control SVS-RD
EDCPstateSVAD	int	25 Hz	Pilot EDCP inputs to control SV-AD
UTC_time	float	25 Hz	GPS-derived time (msec)
OpMode	short	25 Hz	Operate mode (1 for flight, 0 for sim)
RunNum	short	25 Hz	Run number
L_lat	double	25 Hz	ownship latitude (deg), WGS 84, DGPS/INS
L_long	double	25 Hz	ownship longitude (deg), WGS 84, DGPS/INS
L_alt	float	25 Hz	ownship altitude (feet MSL), DPGS/INS
W_lat	double	25 Hz	WAAS/INS latitude (deg)
W_long	double	25 Hz	WAAS/INS longitude (deg)
W_alt	float	25 Hz	WAAS/INS altitude (feet MSL)
BaroAlt	float	25 Hz	Barometric altitude (feet MSL)
RadarAlt	float	20 Hz	Radar altitude (feet AGL)
Gspeed	float	10 Hz	Ground speed (knots)
VertSpeed	float	25 Hz	Vertical speed (ft/min)
HeadingT	float	20 Hz	Heading (deg true)
HeadingM	float	20 Hz	Heading (deg magnetic)
YawRate	float	25 Hz	Yaw change rate (deg/sec)
Pitch	float	25 Hz	Pitch angle (deg)
PitchRate	float	25 Hz	Pitch change rate (deg/sec)
Roll	float	25 Hz	Roll angle (deg)

Name	Type	Rate	Description
RollRate	float	25 Hz	Roll change rate (deg/sec)
TrackAngT	float	20 Hz	Track angle (deg true)
TrackAngM	float	20 Hz	Track angle (deg magnetic)
LonAccel	float	25 Hz	Longitudinal accel. (G's)
LatAccel	float	25 Hz	Latitudinal accel. (G's)
VertAccel	float	25 Hz	Vertical accel. (G's)
AlongTrkAccel	float	25 Hz	Along track accel. ('G's)
CrossTrkAccel	float	25 Hz	Cross track accel. (G's)
RightEngEPR	float	5 Hz	Right engine EPR (no units)
LeftEngEPR	float	5 Hz	Left engine EPR (no units)
TrueAirSpd	float	8 Hz	True air speed (knots)
CalAirSpd	float	8 Hz	Calibrated air speed (knots)
WindSpd	short	10 Hz	Wind speed (knots)
WindDir	short	10 Hz	Wind direction (deg)
TotalAirTemp	short	2 Hz	Total air temperature (deg C)
ThrottlePos	short	25 Hz	Throttle position (deg) (negative sign – reverse thrust)
RudderPos	short	25 Hz	Rudder position (deg)
ElevatorPos	short	25 Hz	Elevator position (deg)
Air_Ground	short	25 Hz	Air-ground state (1/0; 1 = main gear on ground)
NoseWhlSqt	short	25 Hz	Nosewheel squat (1/0; 1 = nose wheel on ground)
ACWeight	float	1 Hz	Aircraft weight (lbs)
PitchFltCmd	float	25 Hz	Flight Director pitch angle (deg)
RollFltCmd	float	25 Hz	Flight Director roll angle (deg)
FltPathAng	float	20 Hz	Flight path angle (deg)
FltPathAccel	float	25 Hz	Flight path accel. (G's)
ILSfrequency	float	5 Hz	ILS frequency (kHz)
ILSlocDev	float	16 Hz	ILS localizer deviation (DDM)
GlideSlopeDev	float	16 Hz	ILS glideslope deviation (DDM)
ILSCapFlag	short	16 Hz	ILS capture flag (1/0; 1 = ILS frequency captured)
GoAround	short	25 Hz	Go-around flag (1/0; 1 = Go Around operative)
GPSstatus	short	1 Hz	GPS status (0-3; 0 = good, 1 = no differential corrections received but the smoothed solution is still good, 2 = smoothed solution bad but corrections now arriving, 3 = no corrections and smoothed solution is bad)
W_GPSstatus	short	1 Hz	WAAS status (0-3; 0 = good, 1 = no differential

Name	Type	Rate	Description
			corrections received but the smoothed solution is still good, 2 = smoothed solution bad but corrections now arriving, 3 = no corrections and smoothed solution is bad)
EPRmode	short	5 Hz	EPR Mode Annunciation (1 = operable)
AutoThrotEng	int	5 Hz	Autothrottle engaged (1 = engaged)
Sel_rwy	string	25 Hz	Arr/Dep rwy selected via CDU
FMS_Vref	short	1 Hz	FMC calculated Vref
Sel_speed	short	1 Hz	Pilot selected speed (MCP)
Uplinked data			
Radarid[5]	int	1 Hz	ID of object in scan
Radarfn[5]	string	1 Hz	Flight# of object in scan
Radarcat[5]	short	1 Hz	Category of object in scan
Radarlat[5]	float	1 Hz	Latitude of object in scan (deg)
Radarlon[5]	float	1 Hz	Longitude of object in scan (deg)
Radaralt[5]	short	1 Hz	Altitude of object in scan (feet)
Radarspd[5]	short	1 Hz	Speed of object in scan (knots)
Radarhdg[5]	short	1 Hz	Heading of object in scan (deg)
Radarnuc[5]	short	*	Navigation uncertainty of object in scan
Radartime[5]	float	1 Hz	Time of traffic acquisition in msec GMT
ADSBid[5]	int	*	ID of ADS-B aircraft
ADSBfn[5]	string	*	Flight# of ADS-B aircraft
ADSBcat[5]	short	*	Category of ADS-B aircraft
ADSBlat[5]	float	*	Latitude of ADS-B aircraft (deg)
ADSBlon[5]	float	*	Longitude of ADS-B aircraft (deg)
ADSBalt[5]	short	*	Altitude of ADS-B aircraft (feet)
ADSBspd[5]	short	*	Speed of ADS-B aircraft (knots)
ADSBhdg[5]	short	*	Heading of ADS-B aircraft (deg)
ADSBnuc[5]	short	*	Navigation uncertainty of ADS-B aircraft
ADSBtime[5]	float	1 HZ	Time of traffic acquisition in msec GMT
TgtScanCnt	short	1 Hz	Scan counter
NumTargets	short	1 Hz	# of targets in current scan (Radar object block only)
MsgNum	short	*	Incoming ATC msg counter

Name	Type	Rate	Description
MsgType	short	*	Incoming ATC message type
Message	string	*	Incoming ATC message text
The next 6 variables are provided by the research software			
AirportTemp	float	1 Hz	Airport temperature (degrees of Celsius)
AirportPressure	float	1 Hz	Airport pressure - inches of Hg
RwyWindSpd	short	1 Hz	Runway Wind Speed (knots)
RwyWindDir	short	1 Hz	Runway Wind Direction (deg)
RwyCond	short	1 Hz	Runway Condition (0-dry,1-wet)
UATstatus	short	1 Hz	UAT link status (0/1; 1 = corrupted)
RIPS downlink data (provided by research software):			
ATCMsgNum	short	*	# of message responding to
ATCMsgID	short	*	Type of ATC response
Taxiway	string	*	Location of exit
RSMalert[2]	int	1 Hz	Incursion alert state (RSM)
RSMid[2]	int	1 Hz	ID of incurring traffic (RSM)
RSMsecs[2]	int	1 Hz	Seconds to collision (RSM)
RSMdist[2]	int	1 Hz	Distance in feet to collision (RSM)
RIAASalert[2]	int	1 Hz	Incursion alert type (RIAAS)
RIAASid[2]	int	1 Hz	ID of incurring traffic (RIAAS)
RIAASsecs[2]	int	1 Hz	Seconds to collision (RIAAS)
RIAASdist[2]	int	1 Hz	Distance in feet to collision (RIAAS)
RIAASrwy	string	1 Hz	Runway of incurring traffic
RIPS output data (provided by research software)			
SelExit	string	10 Hz	Selected exit
AccelCmd	float	25 Hz	Commanded acceleration (ft/sec2)
rotoRWY_x	float	25 Hz	Runway x coordinate (ft.)
rotoRWY_y	float	25 Hz	Runway y coordinate (ft.)
IncursionAudio	short	5 Hz	Aural message selection (0=none, 1=”Runway Traffic, Runway Traffic”, 2=”Runway Conflict, Runway

Name	Type	Rate	Description
			Conflict”)
AdvisoryAudio	short	5 Hz	Aural message selection (0=none,1=”Off Route, Off Route”, 2=”Crossing Hold, Crossing Hold”)
IncursionAlg	short	1 Hz	Incursion monitoring source
LAHSOpos	short	1 Hz	LAHSO position selected

Note: * indicates update on receipt

Table 4.4. Required ARINC 429 DIME data parameters

Parameter	Data Source
UTC time (referenced to GPS time)	Unknown
Radio/Radar Altitude - Left	RA-L
Radio/Radar Altitude - Center	RA-C
Radio/Radar Altitude - Right	RA-R
WGPS Altitude (MSL)	W GPS
WGPS Latitude	W-GPS
WGPS Longitude	W GPS
WGPS Ground speed	W-GPS
WGPS Vertical figure of merit	W GPS
WGPS UTC time	W-GPS
WGPS Vertical velocity	W-GPS
WGPS North-South velocity	W-GPS
WGPS East-West velocity	W-GPS
WGPS Horizontal figure of merit	W-GPS
WGPS Sensor status discretes	W-GPS
True Heading - Left	IRU-L
Body pitch angle - Left	IRU-L
Body roll angle - Left	IRU-L
*True Heading - Center	IRU-C
*Body pitch angle - Center	IRU-C
*Body roll angle - Center	IRU-C
*True Heading - Right	IRU-R
*Body pitch angle - Right	IRU-R
*Body roll angle - Right	IRU-R

(*Note: One channel of IRU measurements is acceptable if receiving all three is not practical.)

Table 4.5. Required ARINC 429 SV Sensors

Parameter	Source	429 Char
Fwd Norm Accel	DAS	IRU
Fwd Lat Accel	DAS	IRU
Fwd Lon Accel	DAS	IRU
CG Norm Accel	DAS	IRU
CG Lat Accel	DAS	IRU
CG Lon Accel	DAS	IRU
Aft Norm Accel	DAS	IRU
Aft Lat Accel	DAS	IRU
Aft Lon Accel	DAS	IRU
GPS Blended Altitude	Hybrid	GNSS
GPS Blended Lat Coarse	Hybrid	GNSS
GPS Blended Lat Fine	Hybrid	GNSS
GPS Blended Lon Coarse	Hybrid	GNSS
GPS Blended Lon Fine	Hybrid	GNSS
GPS Time Coarse	Hybrid	GNSS
GPS Time Fine	Hybrid	GNSS
Status Word #1	Hybrid	NEW
Track (True)	IRU	IRU
Magnetic Heading	IRU	IRU
Heading (True)	IRU	IRU
True Airspeed	ADC	ADC
Baro Altitude (29.92)	ADC	ADC
Baro Altitude	ADC	ADC
Alpha	DAS	ADC
Beta	DAS	ADC

Table 4.6. Required ARINC 429 BAE data parameters

ARINC Label	Parameter Name (LTN 92)	Numeric Range	Units	Significant Bits*	Resolution	Positive Sense	Update Rate
361	Inertial Altitude	131,072 ft	feet	20	0.125	up	32 Hz
312	Ground Speed	4096 kts	knots	15	0.125	always pos.	32 Hz
324	Aircraft Pitch Angle	+/- 180 deg	degrees	15	0.005493	up	64 Hz

ARINC Label	Parameter Name (LTN 92)	Numeric Range	Units	Significant Bits*	Resolution	Positive Sense	Update Rate
325	Aircraft Roll Angle	+/- 180 deg	degrees	15	0.005493	right wing dn	64 Hz
313	True Track Angle	+/- 180 deg	degrees	15	0.005493	CW from True N	32 Hz
314	True Heading	+/- 180 deg	degrees	15	0.005493	CW from True N	32 Hz
322	Flight Path Angle	+/- 180 deg	degrees	15	0.005493	up	32 Hz
326	Body Pitch Rate	+/- 128 deg/s	deg/sec	15	0.003906	up	64 Hz
327	Body Roll Rate	+/- 128 deg/s	deg/sec	15	0.003906	right wing dn	64 Hz
330	Body Yaw Rate	+/- 128 deg/s	deg/sec	15	0.003906	nose right	64 Hz
364	Vertical Acceleration	+/- 4 g	g's	15	0.000122	up	64 Hz
365	Inertial vert Speed	+/- 32,768	ft/min	15	1	up	32 Hz
366	N-S Velocity	+/- 4096 kts	knots	15	0.125	north	16 Hz
367	E-W Velocity	+/- 4096 kts	knots	15	0.125	east	16 Hz
	Radar Altitude						
	GPS time (GMT)						

Note: a) Does not include the sign bit
b) All Data is coded as Binary data except for Label 125 (System Time)
c) If Radar altitude is not available from the ARINC 429 channel, then provide radar altitude from the radar altimeter (analog option).

4.4.2 Recording

4-79. The Data Processing and Display System (DPDS) shall provide display of researcher-selected variables and plots during test runs. This data shall also be provided upon request to the researcher at the completion of daily runs for post-flight analysis.

Data Acquisition System (DAS) requirements will be provided under separate cover.

4-80. In addition, DAS recording shall include all variables listed in Section 4.4.1, recorded at SCRAMNet refresh rates.

4-81. Additional variables that shall be recorded are:

- Corrected GPS PVT (Position, Velocity, and Time) data at 1 Hz.
- Uncorrected GPS PVT data at 1 Hz.
- WAAS GPS PVT data at 1 Hz.
- INS latitude, longitude & altitude at 25 Hz.

PVT data is provided by GPS receivers and includes:

-Latitude/longitude (WGS-84 degrees), altitude (MSL meters)
-East, north, up coordinates in meters
-East, north, up velocities in meters/second
-HDOP, VDOP, and satellites in view
-GPS time to 1 second

4.4.3 Telemetry

Not applicable.

4.4.4 Uplink/downlink

Not Applicable.

4.5 Display Requirements

4.5.1 Types/number

Researcher display requirements at the pallets have been provided in pallet hardware requirements.

4-82. In addition, the SVS-RD PFD and SVS-RD ND displays, identified under Sections 4.1.2, 4.1.3, and 4.1.4, shall be reproduced for display in the TTA utilizing the fiber optic connections.

4.5.2 Location

4-83. The TTA-Research Displays shall be mounted as high as possible on the pallet to facilitate viewing by all TTA occupants, consistent with pallet tipping moment limitations and without requiring significant modifications to the existing pallet mechanical structure.

4.6 Communications Requirements

4.6.1 Intercom

4-84. Crewmembers shall be able to communicate from any seat position with (1) each other and (2) the flight deck.

4-85. The RIPS and SVDC audible alert enunciations from the VRS shall be provided for the pilots in the flight deck and researchers to hear and for recording. This may be accomplished using the intercom system.

4-86. Audio of the EP's comments shall be routed to the 2U computer in the NASA pallet for recording.

4-87. Audio input and output from the VRS shall be provided through the intercom system.

4.6.2 Radio

No additional requirements.

4.6.3 Recording

4-88. Intercom audio shall be recordable on all video tapes.

4-89. The audio outputs of the VRS and the NASA PC driving the Navigation Display shall be recordable on all video tapes.

4.7 Video Requirements

4.7.1 Inputs

4.7.2 Recording

4-90. All video recordings shall be time stamped with GPS-derived time to the second.

The basic recording list will be specified in the InSITE Plan of Test. No more than 8 sources will need to be recorded (excluding the SV Sensors recorders) during any one flight but the sources to be recorded may change between flights.

4-91. The HUD Camera video recording in Table 4.7 shall be a direct recording of the HUD image, including the HUD raster and stroke imagery, and outside scene through the HUD. The recording shall not exhibit "rolling" of the raster and stroke imagery.

Table 4.7. Video Requirement List.

Item	Source	Description
1	R-C/BAE HUD	Zx10 in R-C/BAE pallet (drives HUD)
2	R-C/BAE PFD	Zx10 in R-C/BAE pallet (drives PFD)
3	R-C/BAE ND	Zx10 in R-C/BAE pallet (drives ND)
4	NASA HUD	Zx10 in NASA pallet (drives HUD)
5	NASA PFD	Zx10 in NASA pallet (drives PFD)
6	NASA ND	Zx10 in NASA pallet (drives ND)
7	Forward Camera View	View from the camera mounted on the HUD combiner support structure
8	HUD Camera	Miniature camera mounted in the HUD Eye Box for recording the HUD and external scene view
9	Forward Flight Deck Camera	Fisheye view of the cockpit
10	Video mixer output from 2U computer (FLIR + symbology)	2U computer in R-C/BAE pallet
11	BAE Image Processing Computer Output	Fused FLIR and MMW Radar
12	Tail Camera	Camera image from ARIES tail camera
13	EMM from ONYX	RIPS EMM produced on ONYX

Item	Source	Description
14	Video mixed PFD and ND	Video mix of NASA PFD and ND

Note: The required format for all Video Recording is SVHS.

4.7.3 Distribution

4-92. The video sources listed in Table 4.7 shall be distributed to TTA and other pallets.

4-93. In TTA, the sources shall be selectable on both flat panel display and video monitors. The fiber optic Lightwave connections to both flat panel displays shall be selectable to provide the highest resolution possible for reproducing the PFD and ND.

4.7.4 Uplink/downlink

Not applicable.

5. SOFTWARE REQUIREMENTS

5.1 Researcher-Provided Software

5.1.1 Systems/subsystems

The researcher-provided software is listed in Table 5.1. High-level descriptions of the software are included in this section for the reader's reference.

SVDC Software

The SVDC software is designed to generate HUD and head-down display (HDD) SVS concepts. See Figure 5.1. Two types of terrain texturing are employed on the HUD and HDDs: photo-realistic texturing and elevation-based color-coded texturing (also referred to as generic texturing). The SVS HDD concepts include terrain information on the PFD and ND with a pilot-selectable field of view (FOV). The FOV on the HUD is at unity minification, as it is a conformal display. Traffic information is also presented on the HUD, PFD, and ND when it meets certain display criteria. The RIPS displays (HUD and EMM) have been integrated with the SVDC display concepts and are rendered by the SVDC software. (A second EMM display is generated by the SGI-Onyx. See RIPS software description.)

In addition to the SVS concepts, the SVDC software renders a conventional, size D, PFD and ND for use as a baseline condition. Terrain Awareness and Warning System (TAWS) information, cockpit display of traffic information (CDTI), and a vertical situation display are displayed on the ND for this baseline condition. SVAD FLIR overlay symbology, when used, is generated by the 2U rack computer on the R-C/BAE pallet.

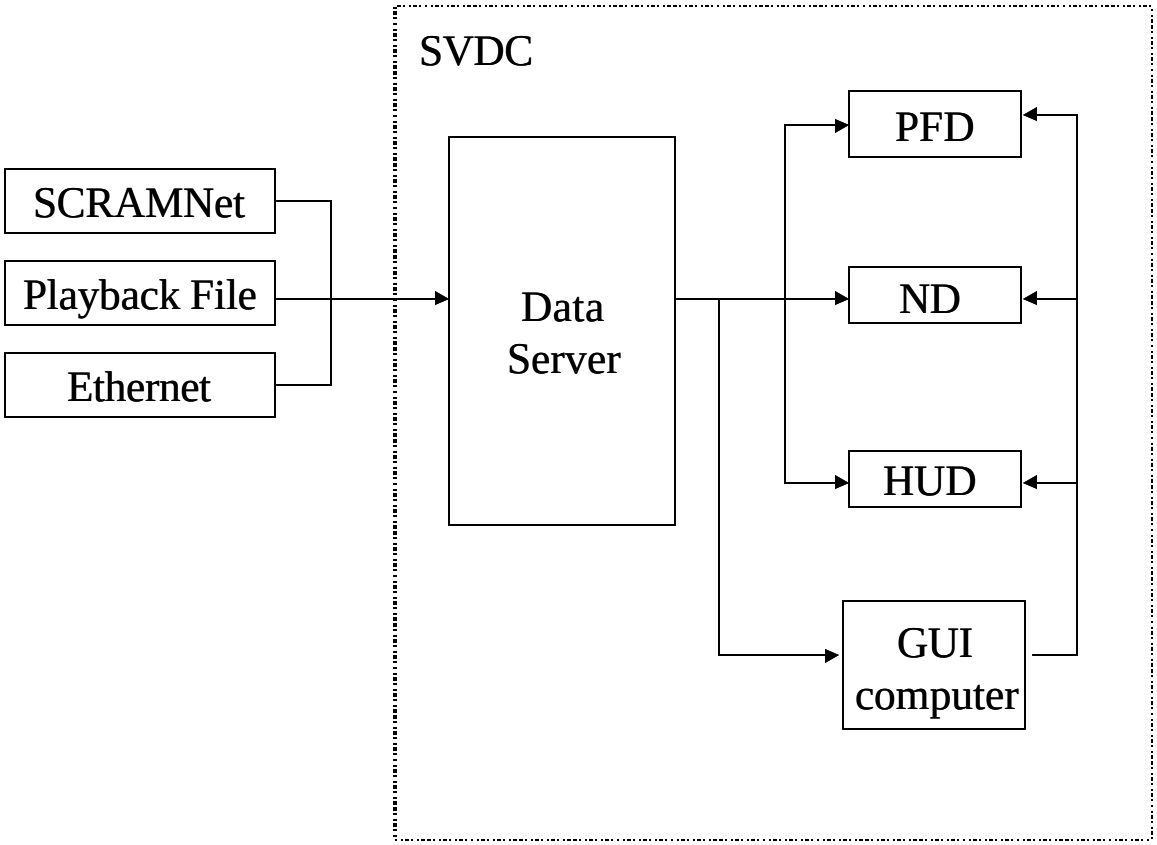

Figure 5.1. SVDC Software Graphics Architecture

RIPS Software

The RIPS software is designed to present airport surface situational awareness and alerting to the pilot. A HUD is generated to provide improved position awareness during final approach, landing, roll out, turn off, and taxi. An EMM shows the airport layout graphically along with the current position of the ownship, current positions of other traffic, and ATC instructions. Runway incursion, route deviation, and crossing hold alerts are also generated and displayed to the flight crew.

Runway incursion alerts are generated by two different onboard incursion detection algorithms. The Runway Safety Monitor (RSM) was developed by Lockheed Martin. The Runway Incursion Advisory and Alerting System (RIAAS) was developed under a cooperative agreement with Rannoch Corporation.

The RIPS software will be provided by the research team. The RIPS graphics (both EMM and HUD) will be hosted on the SVDC PCs. The incursion alerting algorithms, control programs, and a second EMM will be hosted on the Onyx computer (see figure 5.2).

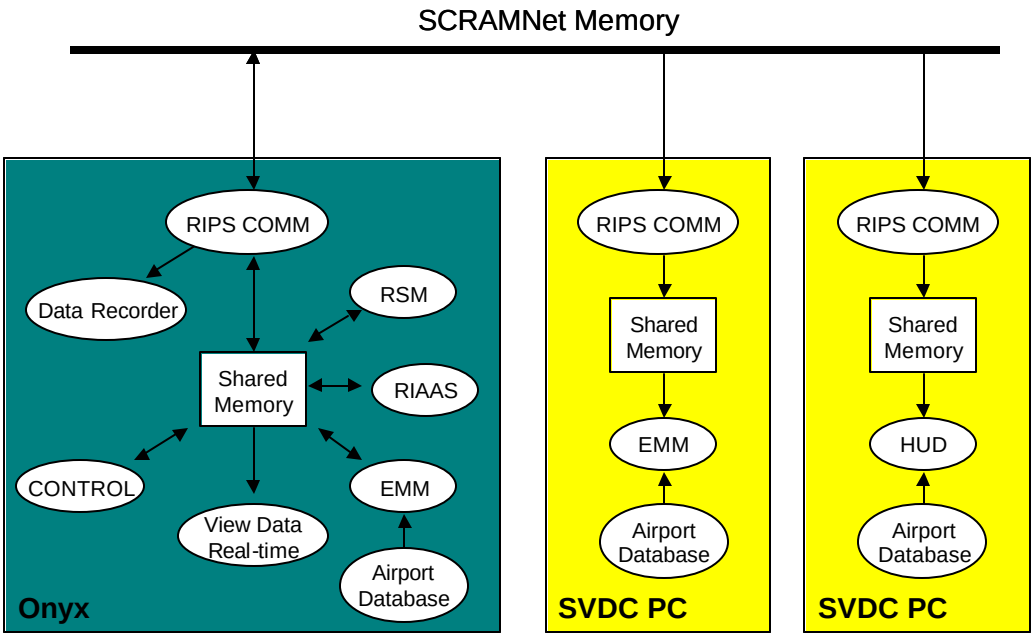

Figure 5.2. RIPS Software Architecture

DIME Software

The DIME software is designed to detect significant disagreements between the stored terrain data and terrain profiles that are being sensed in real-time by ranging sensors on the aircraft. The ranging sensors used for this testing are the radar altimeters and the weather radar. The DIME software architecture is shown in Figure 5.3. The software components used to present information to researchers at the DIME pallet are not shown.

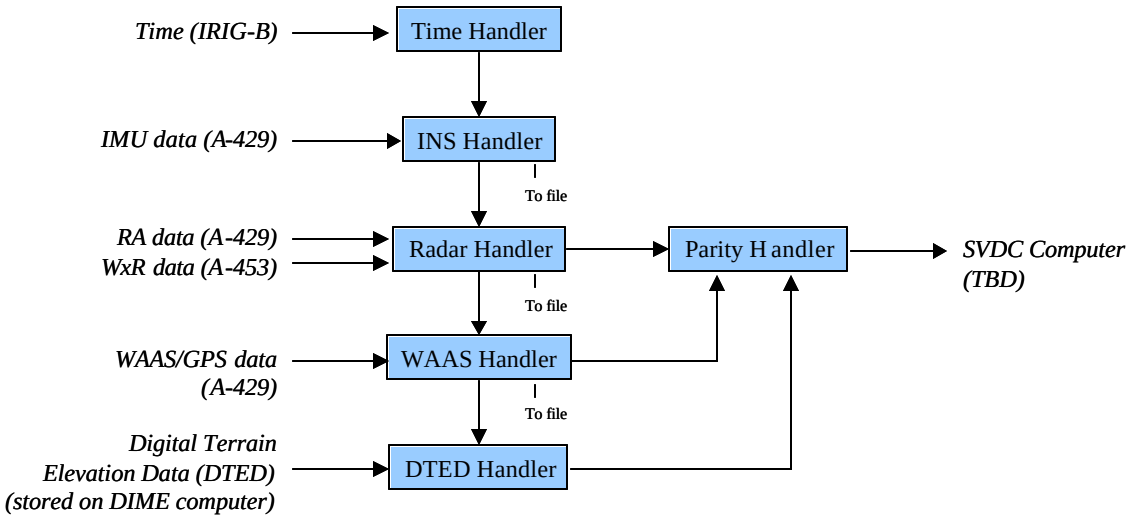

Figure 5.3. DIME Software Architecture

The top four processes on the left in Figure 5.3 are responsible for interfacing with the data streaming in over the input ports from external devices. Specifically, once synchronized, position and attitude data coming from WAAS and the IRUs are used along with ranging measurements from the radar sensors, to create a synthesized terrain model. The parity handler process compares this synthesized terrain model with the model stored in the DTED file. Statistically significant differences between these two models are detected and alerts of integrity loss are then provided to the SVDC computer and ultimately to the pilot at the FDRS.

Software contained within the architecture shown in Figure 5.3 will be provided and maintained by the DIME research team. As such, there are no SDB requirements for DIME software development.

SV Sensors Software

Based upon NASA research/results, Collins has decided to incorporate many of the SV Sensors-oriented applications into future WXR-2100 model radars. SV Sensors is providing 7 of these safety applications for use in the NASA SVS concept. Note, these applications are labeled on the lines joining the respective hardware devices in Figure 4.12.

- *Runway Confirmation(R/W)* – The radar will locate the runway using a nominal ownship location provided by GPS, heading and other aircraft information from the inertial reference units (IRUs), and an airport database provided from the radar computers in Pallet 18. Results of this form of a Terrain Feature Extraction process are sent from the radar computers at Pallet 18 to the ARIES Onyx via an Ethernet link for distribution to SVDC on the SCRAMNet.
- *Air-to-Ground Runway Object Detection (A2G ROD)* – Once the radar has confirmed the location of the runway, it will then switch to verifying the runway is clear of any large objects, including other aircraft, airport vehicles, or major debris. Once located, a track is established for each object. That track will be provided, via an Ethernet link, to the ARIES Onyx for use in the MTT process defined below.
- *Ground-to-Ground Object Detection (G2G OD)* – Using an aircraft discrete (e.g., weight-on-wheels) and/or other aircraft-based parameters, the radar will switch into an ultra-short range configuration and continue to locate ground traffic/obstacles during taxi operation. Once located, a track is established for each object. That track will be provided, via an Ethernet link, to the ARIES Onyx for use in the MTT process defined below.
- *Non-Cooperative Aircraft Tracking (NCAT)* – The radar will output track information on all air traffic within ~6NM and angularly within the field-of-view of the radar. Once located, a track is established for each object. That track will be provided, via an Ethernet link, to the ARIES Onyx for use in the MTT process defined below.

- *Multi-Target Tracking (MTT)* – a software module which will reside in the B-757 Onyx and which will blend TCAS, ADS-B, and radar-based object detections. SRB researchers developed this capability during the HSR Program and flew this software module in the NASA Onyx computer that was installed on the USAF TIFS aircraft. Our intention is to provide SDB (Onyx personnel) the source code that was used on TIFS, written documentation of the algorithms used, and then work with them to generate the MTT module for ARIES.
- *Terrain Feature Extraction (TFE)* – The radar will generate a map of the terrain in front of the aircraft and will provide this measurement to the DIME computers via the Isolation box at Pallet 18 using an ARINC 453 connection.
- *Terrain Obstacles* – The radar will detect and locate any terrain features (including man-made objects) with significant height (those that impinge upon flight altitudes). Results of this process are sent from the radar computers at Pallet 18 to the ARIES Onyx via an Ethernet link for distribution to SVDC on the SCRAMNet.

Other SVS Sensors software to be provided by the research team will process FLIR imagery as shown in Figure 5.4.

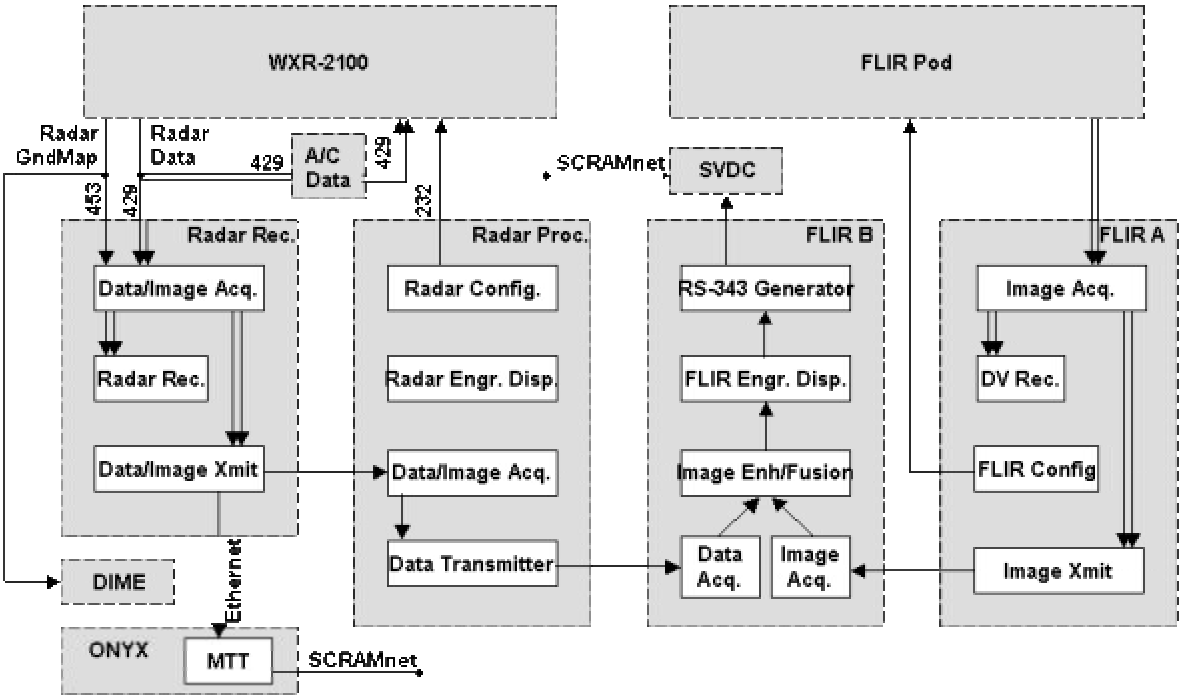

Figure 5.4. SV Sensors Software Architecture

Rockwell-Collins Display Concepts Software

The Rockwell Collins SVIS display software is designed to generate integrated terrain, traffic, weather and pathway displays for the HUD, PFD, multi-function display (MFD) and SVAD displays. Display concepts will be presented for airborne and surface operations.

The HUD display uses conventional symbology combined with wireframe terrain. Sensor integration where the wire-frame is presented with FLIR imagery will be utilized. SGS symbology will be utilized on the ground.

The PFD is an ego-centric perspective display of terrain, traffic, weather and pathway information. This display will be integrated with RIPS, DIME and the x-band radar experiments. Guidance modes will be consistent with the ships Mode Control Panel (MCP). This display will transition to an exo-centric perspective display for ground operations. FLIR imagery may be used in this display.

The MFD is a co-planar display of terrain, traffic, weather and flight path. It consists of a map view and a vertical profile view. On the ground, only the map view will be displayed. FLIR imagery may be used in this display.

The SVAD display will be a repeater of the HUD camera video for most runs, if the capability to display HUD video on the SVAD is provided. It might also be used as a PFD to evaluate whole cockpit procedures. The display may also be used to evaluate sensor integration concepts, subject to display video source limitations.

BAE Display Concepts Software

BAE Systems shall provide software to support the required and intended operations to support their concepts. Descriptions shall be provided at a later date. They intend to use NASA software for their PFD and ND.

5.1.2 Provider(s)

Table 5.1. List of Researcher-provided Software and Providers

Item	Software	Provider/Contact	Platform
1	SVDC	ConITS/Trey Arthur	Zx10, 2U
2	DIME	Ohio University/ Steve Young	DIME computer
3	RIPS	Lockheed, Rannoch/Denise Jones	Onyx, Zx10
4	SV Sensors	RTI/ Steve Harrah	WXR-2100, PCs
5	RC SVS	Rockwell-Collins/Tim Etherington	Zx10, HGS4000
6	BAE SVS	BAE Systems//Dave McKay	Zx10, Fusion processor, 2U

5.1.3 Interfaces

5-1. Software shall be provided to support the Hardware Interfaces specified in Sections 4.1 and 4.3.

5.1.4 Platforms

See Table 5.1.

5.2 Common Software to Simulation and Flight (SDB-developed software)

5.2.1 Mathematical Representation

Not applicable.

5.2.2 Computational Techniques Considerations

5-2. SDB shall develop software to provide an accurate estimate of the 757 ARIES true altitude with respect to Mean Sea Level. The true altitude estimate shall be entitled "geometric altitude" and be provided on the SCRAMNet with a minimum update rate of 50 Hz. The estimator resolution shall be consistent with the resolution of the corrected barometric altitude.

5-3. Ownship surface position determination performance shall be no less than was provided during the RIPS trials at DFW in 2000. The solution should include filtering the DGPS position with the INS position and providing this blended solution to the RIPS. Note: two GPS receivers shall be employed at WAL/RNO (AshTech and WAAS). The AshTech/INS solution shall be used for ownship position determination. A WAAS/INS solution shall be selectable as a backup. Also note that the parameter values for the blending filter during surface position determination may require different values from the values used for flight position determination.

5-4. SDB shall implement the Multi-Target Tracking (MTT) module on ARIES ONYX computer.

Note: MMT is a software module which will reside in the B-757 Onyx and which will blend TCAS, ADS-B, and radar-based object detections. Sensors Research Branch researchers developed this capability during the HSR Program and flew this software module in the NASA Onyx computer that was installed on the USAF TIFS aircraft. The SV Sensors PI's intention is to provide SDB (Onyx personnel) the source code that was used on TIFS, written documentation of the algorithms used, and then work with them to generate the MTT module for ARIES.

5.2.3 Display specifications

5-5. SDB may be tasked to develop stroke symbology sets for recording and implementation on the HGS4000 by Flight Dynamics Incorporated (FDI).

5.2.4 Audio Specifications

None identified.

5.2.5 Data-Link Specifications

None identified.

5.2.6 Interfaces

5-6. The System Development Branch (SDB) shall provide a SCRAMNet Data Interface (see Section 4.4.1).

5-7. The SCRAMNet Data interface shall meet the desired data update and resolution requirements, as defined in Section 4.4.1. If required resolution and update rate can't be achieved, then discussions will be conducted to either accept the best possible data rate and resolution, or remove the data from the SCRAMNet data request list.

5-8. The data interface shall provide the capability to read all data in a highly-reliable and robust manner. In addition, data read protection shall be provided. Required data variables, update rates, and resolution is provided in Section 4.4.1. Additionally, there is a potential use of the SCRAMNet data interface for when the SVDC display system is employed in the IFD for piloted simulation evaluations.

5-9. A bi-directional communication path between the VRS to the SVS display computers shall be established. Outputs of the VRS shall be placed on SCRAMNet.

Note: The communications method will be mutually agreed upon by the VRS developer and NASA but this interface is expected to be RS-232. Software shall be written to establish the bi-directional communications and hand-shaking, transmit voice recognition vocabularies, receive VRS recognitions, transmit VRS speech generation commands, and transmit push-to-talk and sample noise commands, if required. An Interface Control Document (ICD) will be delivered to describe the VRS interface and identify bi-directional communications requirements.

5-10. SDB shall develop software to communicate with the HGS4000 computer. An ICD will be delivered to support this task.

5-11. Simulated Air Traffic Control (ATC) instructions are to be input by a RIPS researcher from a laptop located onboard the research aircraft through a control program running on the Onyx. These ATC inputs shall be provided to the RIPS software on the ONYX with minimal latency (<1 sec). The controller workstation that has been used in previous RIPS studies will not be utilized.

5.2.7 Data Recording

None identified.

5.2.8 Graphical User Interface (GUI)

None identified.

5.2.9 Operational Scenario

None identified.

5.2.10 Performance Requirements

None identified.

5.2.11 Assumptions, constraints, and dependencies

None identified.

5.3 Other Software Requirements

5-12. The capability shall exist to make necessary changes, including modifications, deliverable media, etc., to the research software while on deployment.

6. SIMULATION REQUIREMENTS

6.1 Lab checkout simulation required

In general, RSIL or FSIL will be used to perform functional checkout of the flight system (figure 4.1) using actual hardware wherever practical.

6.1.1 NASA SVS

6-1. Since the FSIL/RSIL facility is required to refine the synthetic vision flight systems to prepare for actual flight testing, access to the FSIL/RSIL facility shall be provided well prior to deployment.

6.1.2 SVDC

6-2. The FSIL or RSIL shall be used for set-up and integration of the SVS-RD, HUD, SVAD, and the SVS-PCs with the SCRAMNet ring. Aircraft state data shall be supplied to the SVS-PCs via SCRAMNet. Support shall be provided to procure required SCRAMNet cards to effectively interface with the FSIL/RSIL facility and ARIES systems. Specific parameters to be supplied to the SVS-PCs are listed in section 5.

6-3. The ability to fly a B-757 simulation model via simple joystick while viewing the SVS-RD, SVAD and HUD shall be provided. Maneuvering the B-757 simulation model via autopilot is required. Provisions to simulate flying the B-757 in the WAL or RNO vicinity, such as initialization of aircraft longitudinal and lateral positioning, shall be provided.

6-4. The SVS-RD, SVAD, and HUD experimental displays should be recorded on video for FSIL/RSIL integration and testing. Data parameters being sent to the SVS-PCs shall be recorded to assist debug and checkout efforts.

6-5. Evaluations in the FSIL/RSIL environment shall be used to establish satisfactory performance of the HGS-4000 HUD system. Satisfactory performance is defined as the ability to draw and control the brightness and contrast of flight guidance symbology and raster imagery, provided by the SVDC computers and FLIR cameras, on the HUD combiner glass. FDI stroke modes provided by the HGS-4000 computer shall also be evaluated.

6.1.3 RIPS

6-6. Display software developed and tested in the RSIL/FSIL shall be transferred to the IFD simulator environment and be tested while driving the actual flight deck displays (SVS-RD, SVAD, and HUD). Note: SVAD implementation in the IFD may deviate from the aircraft mechanical installation as required to enable implementation within resource and schedule constraints. Note: In RSIL/FSIL, the HUD can be mounted on a test rig.

6-7. Flight hardware and software that is to be used to enable pilot control of the displays shall be integrated and tested for acceptable performance.

6-8. The Experimental Display Control Panel (EDCP) shall be used to accept pilots inputs directed to the EMM and the HUD.

6-9. Flight hardware and software that is to be used for data link applications shall be integrated and tested for acceptable performance. Data link applications include: ADS-B and DGPS corrections. Software shall be developed to emulate interfaces to the data link hardware during RSIL/FSIL testing. Note: In lieu of RSIL/FSIL testing, the data links may be tested directly onboard the ARIES with ground-based equipment.

6.1.4 DIME

6-10. The FSIL/RSIL facility shall be used to demonstrate satisfactory performance of all interfaces shown on Figure 4.13. Satisfactory performance will be determined by the DIME Lead Researchers.

6.1.5 SV Sensors

The FSIL/RSIL facility is not required.

6.2 Piloted SDB simulation support

6.2.1 Introduction

Under NASA's Aviation Safety Program, flight testing of Synthetic Vision Systems will be conducted in the vicinity of WAL and RNO airports using the NASA Langley Research Center ARIES 757 aircraft. In preparation for this flight test, significant engineering development and checkout of the display concepts (hardware and software) in ground simulation is necessary. Several components of this ground simulation work are ideally suited for the IFD simulator.

The purpose of the IFD simulations is to develop and evaluate key hardware and software components and operational procedures, as well as provide familiarization and training for the flight crew, including guest pilots, prior to the WAL/RNO 757 deployment, thus, minimizing on-aircraft checkout.

6.2.2 Project Scope

Proposed Schedule: To be determined but tentatively starting approximately 3 months prior to local area flight checkout, continuing through Reno flight deployment. It is anticipated that approximately 36 hours will be required for engineering development of systems concepts and checkout, followed by approximately 84 hours of pre-flight piloted test time.

Ground simulation evaluations will be conducted by on-site NASA/Langley pilots, other test pilots and the planned WAL/RNO subject pilots. A formal plan of test for the IFD simulations will not be written as these sessions will be for pilot training and familiarization. However, pilot usability data may be gathered. A pilot briefing

guide will be provided by the InSITE researchers and used to brief the subject pilots both before the ground simulations and flight evaluations.

6.2.3 Hardware Requirements

6-11. Maximum commonality between the proposed InSITE flight test configuration and the IFD should be provided. Any modifications, alterations, or deviations from these requirements shall be mutually agreed upon.

Key requirements are identified in this document to emphasize critical components or features.

6-12. The IFD shall be used in the fixed-base mode only.

6.2.3.1 Key Modifications Needed to Existing Simulator

6-13. The SVS-RD shall be installed on the left side of the flight deck. The installation should mimic the 757 ARIES configuration. This unit shall be one of the SVS-RD units from ARIES for this installation.

6-14. The HGS-4000 HUD computer, HGS-4000 Mode Control Panel, HGS-4000 Normal / Experimental Switch, and associated overhead projector unit shall be installed. Brightness, contrast, and declutter controls, as defined in this Flight Test Requirements document, shall be fabricated and installed to replicate those being fabricated and installed for ARIES.

6-15. The SVAD should be installed in a method similar to that used for the ARIES, but may be installed in any mutually acceptable manner that can be accomplished within resource and schedule constraints.

6-16. The VRS shall be installed and interfaced in the IFD cockpit similar to that used in the ARIES (Section 4.6.1).

6-17. The HUD shall be aligned with the outside visual scene.

6-18. Zx10 PCs and associated peripherals will be provided and shall be installed and interfaced into the IFD facility and the IFD simulator. Power, video, SCRAMNet, and other user-interface and network communications (such as Ethernet) devices shall be provided for this purpose. These customer-supplied computers will generate the SVS Display concepts developed by NASA, Rockwell-Collins, and BAE Systems.

6.2.3.2 Visual Scene and Displays

6-19. A local area and RNO database, including terrain and airports, will be provided and shall be used to generate an out-the-window visual scene.

6.2.3.3 Audio System

6-20. RIPS and SVDC audible alert enunciations shall sound in the flight deck via intercom.

6.2.3.4 Visual Recording

No modifications are needed.

6.2.3.5 Audio Recording

No modifications are needed.

6.2.3.6 Interfaces

6-21. The RIPS research team shall have a computer interface to the IFD environment to control the experimental system. This interface must support x-windows.

6-22. Remote keyboard, video and mouse interfaces between the IFD cockpit and the SVS-PCs shall be provided.

6-23. Interface definitions are provided in Section 4.3 of this document. These requirements shall be used to ensure commonality with the INitial SVS Integrated Technology Evaluation.

6.2.3.7 Discussion of Controls, Displays, Equipment

6-24. All IFD controls and displays shall otherwise provide faithful replication of ARIES 757 functionality, to the extent that the existing IFD baseline configuration does so.

6-25. The EDCP shall be installed on the left side of the flight deck for pilot inputs to the RIPS.

6.2.3.8 Performance Requirements

Performance requirements are To-Be-Determined (TBD).

6.2.3.9 Procurements Needed

No procurements have been identified.

6.2.3.10 Fabrications Needed

6-26. Hardware requirements have been specified above. Any fabrications shall be the responsibility of SDB.

6.2.3.11 Constraints or Limitations

Non-obvious constraints or limitations have not been identified.

6.2.3.12 Assumptions or Dependencies

Numerous assumptions and extreme dependencies with the ARIES 757 WAL/RNO deployment, as noted above, are in place.

6.2.4 Software Requirements

6-27. Maximum commonality between the proposed InSITE flight test configuration and the IFD should be provided. Any modifications, alterations, or deviations from these requirements shall be mutually agreed upon. Key requirements are identified in this document to emphasize critical components or features. This section details

simulation software only and does not pertain to customer-supplied software resident on the Zx10 PCs.

6.2.4.1 Mathematical Representation

6-28. A Boeing 757 aircraft simulation model, representative of the NASA ARIES, shall be provided. This model shall include the Flight Management System (FMS) with the published routes to WAL or RNO (i.e., the FMS approaches, departures, and missed approaches) available to be loaded as the default. Representative ARIES Boeing 757 FMS and pilot-FMS interface controls simulation including autoflight systems shall be provided. Known restrictions, limitations, or assumptions of these models shall be provided prior to the start of IFD simulations.

6-29. Current WAL and RNO area navigation databases shall be implemented in the Flight Management System (FMS).

6.2.4.2 Computational Techniques Consideration

6-30. The FMS and aircraft state parameters on SCRAMNet data list (Section 4.4.1) shall be replicated on the IFD SCRAMNet ring for access by the customer-supplied PCs. This replication shall include, as a minimum, the aircraft state parameter characteristics (such as sensor location and approximate signal conditioning) and update rate.

No other special computational techniques have been identified.

6.2.4.3 Display Specifications

6-31. Selected traffic shall be displayed on the out-the-window scene to evaluate runway incursion alerting algorithms. Traffic patterns will be defined by the research team and will emulate scenarios that will be conducted during the flight test.

6.2.4.4 Audio Specifications

None identified.

6.2.4.5 Data Link Specifications

6-32. There shall be no data link in this simulation.

6.2.4.6 Interfaces

6-33. Traffic data shall be provided to the RIPS in the format and at the rates listed in Table 4.3. Note, during the flight test, traffic data will be provided to the RIPS by the ADS-B receivers and onboard fused surveillance data (MTT, ADS-B, TCAS, and radar objects).

6-34. Interface definitions shall mirror the Flight Test Requirements (Section 4.3) to the greatest extent possible and practical.

6.2.4.7 Data Recording

6-35. Data recording shall be provided for simulation checkout and trouble-shooting. Indigenous data recording capability will be provided in the customer-supplied PCs. No other data recording shall be necessary.

6.2.4.8 Graphical User Interface

No graphical user interface requirements have been identified for the IFD.

6.2.4.9 Operational Scenario

6-36. Airborne and ground-based operations shall be conducted in the (simulated) WAL and RNO local areas. The capability to start the simulation, trimmed, straight-and-level or on-ground, at pre-defined points within the WAL or RNO databases shall be provided. The initial conditions shall be provided prior to the start of the simulations.

6.2.4.10 Performance Requirements

No unique performance requirements have been identified.

6.2.4.11 Assumptions, Constraints, and Dependencies.

Numerous assumptions and extreme dependencies with the ARIES 757 WAL/RNO deployment, as noted above, are in place.

6.2.5 Simulation Facility Validation

Certification of the simulation will not be necessary. The following validation measures are defined.

6.2.5.1 System Validation/Certification

6-37. The following simulation characteristics are of significance in this test and shall be evaluated during the validation process:

- FMS Mode Select Operation and Mode Annunciation
- FMS Auto-Flight Selection and Operation
- FMS Flight Guidance Display Characteristics
- WAL/RNO Out-The-Window Scene (Evans-Sutherland generated) Correlation to HUD-Displayed WAL/RNO Terrain Database (Zx10 PC-generated)
- Control Column Force-Position Characteristics (static and dynamic)
- Control Wheel Force-Position Characteristics (static and dynamic)
- Aircraft Response to Pilot Control Inputs (All Axes)
- Multi-Target Tracking algorithm (MTT)
- HUD Brightness, Contrast, and Declutter Control
- SCRAMNet Data Correlation and Consistency to Aircraft-Measured Parameters

6.2.5.2 Validation Methods

6-38. The aircraft and FMS subsystem models shall be quantitatively validated against the existing checkcases used in their respective developments. In the unlikely event that these FMS checkcases are not available, aircraft reference data or on-aircraft data shall be used to generate checkcase data.

6-39. Known restrictions, limitations, or assumptions of these models, if any, shall be provided prior to the start of IFD simulation validation.

6-40. Qualitative validation and simulation acceptance shall be conducted by pilot-in-the-loop simulation with SVS research personnel and NASA ARIES subject matter experts (i.e., test pilots).

6.2.5.3 Acceptance Levels

6-41. The acceptance levels used in the original quantitative simulation validation shall be reused. Acceptance levels for quantitative assessments are self-evident.

6.2.5.4 Validation Metrics

6-42. The validation metrics used in the original quantitative simulation validation processes shall be reused. Qualitative validation metrics are TBD.

6.2.5.5 Validation Data

6-43. Validation data, taken in the original quantitative simulation validation processes, if available, shall be reused.

6.2.5.6 Validation Set-Up

6-44. Validation set-ups used in the original quantitative simulation validation processes, if available, shall be reused. Qualitative validations shall be performed from both static and dynamic maneuvers which will be defined at a later date.

6.2.6 Experiment Definition

The primary purpose of the IFD simulations is to develop and evaluate key hardware and software components, and operational requirements, as well as provide familiarization and training for the flight crew (including guest pilots) prior to the WAL/RNO 757 deployment. This process will minimize on-aircraft checkout and but it is not, per se, an experiment, although the simulations will use many of the same conditions and measures for verification and validation.

6.2.6.1 Approaches and Procedures

The broad objective is to evaluate and optimize flight deck procedures and planned flight maneuvers. Training and familiarization for both the safety and evaluation pilots will also be conducted.

This part will begin with the conduct of planned flight maneuver segments and tasks. Upon successful completion, simulations may include parts of or entire planned flight profiles (once in the WAL or RNO local operating area). Data collection procedures and techniques may be used for training and critique.

6.2.6.2 Overall Matrix of Research Runs

A simulation test matrix will not be established since the primary purpose of these simulations is checkout and training. However, a subset of the planned text matrix for the flight test will be used.

6.2.6.3 Simulator Sessions

Simulator session definition has not been completed. For piloted simulation activity, three (3) hour blocks of simulation time should be planned using one subject pilot and test engineer. Two (2) blocks should be planned per day. Pre-simulation and post-simulation pilot briefing will be conducted around these simulation blocks. Note: This does not include simulation time required for checkout of equipment and interfaces prior to the start of piloted simulation sessions.

6.2.6.4 Output Information

At this time, no output information is anticipated.

7. FLIGHT OPERATIONS REQUIREMENTS

7.1 General Overview

The following flight operations requirements are based on the research objectives given in Section 3.2.1, combined with the need to facilitate experimental system development. The details of the flight test will evolve as a natural consequence of simulation testing being performed for experimental systems development and research. The detail flight test plans will be published as part of the Flight Test and Safety Operations Report (FTOSR) and Plan-of-Test.

The flight test will begin in the NASA/LaRC local area, primarily using the Wallops Flight Facility (FAA Identifier: WAL) as the testing location. It is anticipated that local area testing will launch and terminate at NASA/LaRC facilities located at Langley Air Force Base (LFI). Local area testing will focus on checkout and integration, followed by experimental evaluations/research focusing on RIPS, SVS-integration concepts, and CFIT-related scenarios and objectives. Both WAL and RNO databases and flight operation procedures will be used in the NASA/LaRC local area. Following successful NASA/LaRC local area testing, operations shall deploy to the Reno/Tahoe International, NV airport area (FAA Identifier: RNO) for flight test evaluations which shall emphasize DIME and SVS integration concepts. Only the RNO database will be used at RNO. While RNO and NASA/LaRC local area testing will emphasize certain technical and programmatic objectives, all SVS technical and programmatic areas will be represented and actively tested at each location. Showcase demonstration flights should occur at RNO, subject to resource and schedule constraints, and as agreed between AvSPO and AirSC management.

Testing objectives and experimental scenarios will be developed prior to the start of the flight test to optimize flight test efficiency with consideration of the prioritized research objectives.

7.2 Location

7.2.1 Check-out Locations and Local Research Sites

7-1. NASA/LaRC (located at Langley Air Force Base, FAA Identifier: LFI) shall be the primary base for check-out and local research operations. Check-out and local area research operations shall employ Newport News/Williamsburg (PHF), NASA Wallops (WAL), and Langley Air Force Base (LFI) airports.

7-2. Experimental systems development shall enable any of these facilities to be employed. All planned WAL and RNO evaluation tasks, including approach and landing operations, through runway and taxi operations, shall be considered as viable options for initial planning. As flight test development progresses, downselection of operations to certain airports and runways may be possible due to facility and equipment restrictions.

7-3. Up-and-away air work in the NASA/LaRC local area shall also be expected for system checkout and development.

Selection of facilities for a specific flight will be determined based on air traffic, weather, research objectives, or other logistical considerations during the development of the specific flight test maneuvers and flight cards.

7-4. Pre-deployment of other appropriately equipped Langley Research Aircraft and Langley researchers and other support personnel to these local area facilities shall be provided, as necessary, to support testing objectives.

7-5. Differential GPS correction shall be provided to ensure uninterrupted and simultaneous operation, including landing, roll-out, takeoff, and taxi testing, at each local airport.

7-6. Coordination with local Air Traffic Control personnel shall be conducted to ensure smooth and efficient operations.

7.2.2 Deployment sites

7-7. Following successful completion of checkout and research objectives in the local NASA/LaRC area (i.e., WAL-testing), operations shall deploy for flight test evaluations at Reno, NV (RNO) that will emphasize DIME and SVS integration concepts in an operationally-realistic, terrain-challenged environment.

7-8. Differential GPS correction shall be provided to ensure uninterrupted and simultaneous operation, including landing, roll-out, takeoff, and taxi testing, for RNO.

7-9. Coordination with local Air Traffic Control personnel shall be conducted to ensure smooth and efficient operations.

7.3 Participation by Langley Research Center Aircraft

7-10. All test flights shall be conducted using the NASA Boeing 757 ARIES. The requirements for which are contained herein.

7-11. The NASA Be-200 aircraft (or mutually-accepted replacement) shall be operated as an intruder aircraft in RIPS test scenarios, radar surveillance and detection scenarios (detection of dynamic object), and SV-cockpit display of traffic information (CDTI) scenarios. The Be-200 aircraft shall be available for both local area and RNO testing. The Be-200 may not be required on all flights but should be considered as such for planning purposes. Scheduling will be based on testing objectives and experimental scenarios (see Section 7.1). The Be-200 shall be equipped with ADS-B with altitude reporting. The ADS-B data shall consist of the parameters listed in Table 4.3. UAT data link is preferred.

7-12. During local area evaluations, participation by the NASA C-206 aircraft as an additional intruder aircraft is desired and should be made available as C-206

priorities dictate. No actions should be taken to preclude the use of the NASA C-206 during these local area research flights. If available, the G-206 shall be equipped with ADS-B with altitude reporting. The ADS-B data shall consist of the parameters listed in Table 4.3. UAT data link is preferred.

7.4 Participation by Non-Langley Research Center Aircraft

During RNO evaluations, a Piper Cheyenne aircraft (PA-42), operated by Marinvent Corporation, might participate as an additional intruder aircraft. The flight test capabilities of the Marinvent Cheyenne are available at the Marinvent web site (www.marinvent.com). Marinvent is under contract with Boeing/Jeppesen to support their synthetic vision efforts. Boeing/Jeppesen is a NASA/LaRC Cooperative Research Agreement partner in the Synthetic Vision Systems Project. During WAL evaluations, a Rockwell Collins Sabreliner-50 aircraft might participate as an additional intruder aircraft. The Sabreliner will transmit/receive ADS-B via 1030/1090 data link. All joint flight operations involving non-NASA aircraft shall be approved by the LaRC ASRB, the LaRC Aviation Manager, and all involved LaRC research pilots.

7.5 Participation by Ground Vehicles

During local area evaluations, participation by a ground vehicle (e.g., a van) as an additional intruder will be used. Such participation shall be approved by the LaRC ASRB, the LaRC Aviation Manager, and all involved LaRC research pilots.

Ground vehicles may be used to assist in the calibration of systems during checkout and integration testing.

7.6 Meteorological Phenomena of Interest

The desire of the InSITE team is to:

a) maximize research flight time by developing operational margins and procedures which allow for flying in other than visual meteorological conditions, and
b) conduct research flights in operationally-realistic weather conditions to fully develop and test the technologies being implemented for this flight test.

It is not the desire of the team to alter the flight test schedule or deployment in an attempt to find specific weather conditions.

7-13. Specific flight test maneuvers and operational scenarios, including risk mitigation strategies, methods, and procedures for safe and efficient flight testing, shall be mutually developed which allow research operations in the meteorological phenomena (detailed below) within the Boeing 757 flight envelope, subject to Airworthiness and Safety Review Board and LaRC management approvals.

<u>Prioritized Meteorological Conditions</u>

1. Day VMC (with and without simulated IMC)
2. Night VMC
3. IMC-VMC Transitions
4. IMC – surface operations only

7.7 Proposed Number of Flights and Frequency

7-14. The flight test shall be composed of four phases. These phases should occur without significant delay between phases or aircraft reconfiguration to ensure that equipment calibration and integration integrity is maintained; otherwise, re-installation, re-calibration, and checkout may be necessary between phases.

7-15. The first phase shall be for system checkout, integration checkout, and pre-research scenario development. This phase shall be conducted in the NASA/LaRC local area. This phase shall consist of no less than 15 flight hours, flown in no fewer than three sorties. This phase shall continue until acceptable performance is observed by the SVS Lead Researchers. The frequency of local check-out flights shall be adjusted to permit a reasonable "test-and-fix" operational scenario for data analysis, system debugging, and sortie/scenario development and planning. Any instrument check flights or build-up, risk-mitigation flight testing required as part of ARIES development or FTOSR-imposed stipulations shall be over and above this flight test estimate.

7-16. The second phase shall consist of research flying in the local NASA/LaRC area. This phase shall consist of no less than 30 flight hours, flown in no fewer than seven sorties. Flights may be flown on consecutive days. However, some brief down time between sorties might be requested for data analysis, system debugging, sortie/scenario development and planning and accommodation of evaluation pilot travel schedules.

7-17. The third phase shall consist of research flying on deployment to the Reno/Tahoe International Airport operating area. The first sortie conducted on the Reno/Tahoe International Airport deployment shall be used for local area checkout, familiarization, and pre-research sortie/scenario development and planning. Given successful completion of the systems checkout flight on deployment, the sortie frequency shall shift toward maximum operational use of ARIES. This phase shall consist of no less than 30 flight hours, flown in no fewer than seven sorties. Evaluation pilots (and designated VIPs/Observers) will be scheduled contiguously throughout this phase for maximum operational frequency.

7-18. The fourth phase should consist of showcase demonstration flying for Very Important Persons (VIPs) on deployment at Reno/Tahoe International Airport. This phase may be eliminated due to resource and schedule constraints, per mutual agreement of AvSPO and AirSC management. If it occurs, it is anticipated that this phase should consist of one day to conduct at least one sortie

for rehearsal, followed by three (3) days of two (2) sorties per day with one sortie scheduled in the afternoon and one sortie in the evening/night.

7.8 Planned Flight Test Envelope (Proposed Flight Test Maneuvers)

7-19. All maneuvers shall be flown within the normal operational envelope of the Boeing 757 ARIES aircraft. Non-normal aircraft conditions (e.g., single engine departures) might be simulated to increase evaluation pilot workload and stress the evaluation pilot's use of the synthetic visions systems concepts (subject to ASRB approval).

Detailed flight test operations and test maneuvers will be developed in preparation for the flight test. These operations and maneuvers will be detailed in the FTOSR and Plan-of-Test, to be published prior to the start of flight test.

Evaluation tasks will be mutually developed by tailoring existing FAA-approved approach and departure procedures. Tailoring will be applied to define procedures and constraints which aid in experimental data collection and subsequent data analysis. Further, the tailoring and evaluation maneuvers will take into account the weather and visibility conditions which exist for the evaluation since low/impaired visibility and flight in actual weather conditions are planned.

The test will primarily emphasize approach and departure maneuvers and surface operations, including approved low visibility runway and taxiway operations.

Proposed operations might include:

- ILS, Visual, and non-precision approaches (including Localizer/Distance Measuring Equipment (LOC/DME) approaches) to full-stop, touch-and-go, or wave-off.
- Take-off.
- Taxi operations.
- Departures and wave-offs using reduced throttle settings to simulate single engine climb gradients.
- Autopilot Coupled Approaches. (using ship's system signals)
- Straight-and-level low altitude segments (<5000' AGL, Clear below)

Typically, experimental evaluations will dictate that the Evaluation Pilot is the pilot flying; however, scenarios and tasks might be developed where the EP observes a research display while sitting in seat 3 or 4 as the NASA Pilots assume the Pilot-Flying (PF) and the Pilot-Not-Flying (PNF) duties.

7.9 General Test Procedures

7-20. Multiple evaluation runs shall be flown on a given flight.

7-21. Each evaluation run shall involve a planned flight profile/evaluation task with pre-planned and controlled experimental conditions, consisting of combinations of weather, actual or simulated outside visibility, SV systems concepts, simulated non-normal situations, and the presence or absence of intruder aircraft.

7-22. Each evaluation shall be pre-briefed on the ground and set-up, with verification, before execution in-flight.

Following each in-flight evaluation, flight to a pre-briefed altitude and operating area, under safety pilot control, may be executed to allow time to set-up for the next scenario and collect evaluation pilot comment and other data. Similar procedures may be used for surface operation evaluations.

7-23. A mix of outside and NASA-LaRC evaluation pilots shall be used. Non-LaRC pilots shall meet evaluation pilot qualifications determined by the Pilots Office and approved by the Aviation Manager.

7.10 Special Training Requirements

7-24. Training and familiarization in the NASA/LaRC VISTAS-3 simulation facility or the IFD simulator shall be required by all participating evaluation pilots, including those both outside and within NASA-LaRC.

7.11 System Validation Requirements

7-25. Baseline systems verification and validation shall be performed in accordance with existing ARIES standards.

7-26. In addition to standard systems verification, the following items are of special interest and shall be validated (exact methods: TBD). These are:

1) Terrain Database Alignment and Aircraft Positional Accuracy:
The terrain database and associated aircraft positional data shall be verified. This verification shall be conducted prior to the start of or during the local area checkout and also, during the checkout phase on the RNO deployment. Procedures for this process shall be developed no later than 2 months prior to the start of aircraft integration testing.

2) HUD alignment and Optical Performance:
HUD alignment verification and validation procedures similar to that employed during the EGE deployment shall be conducted prior to the start of the flight tests as given by References 4 and 5. In addition, installed HUD performance, related to luminance, shall be tested following SAE ARP5287 ("Optical Measurement Procedures for Airborne Head-Up Display") during aircraft integration testing.

3) FLIR pod alignment and image scaling:
   FLIR pod alignment and image scaling verification and validation procedures similar to that employed during the EGE deployment shall be conducted prior to the start of the flight tests.

The special systems verification requirements, methods, and procedures will be mutually developed with completion of requirements, methods, and procedures no later than 2 months prior to the start of aircraft integration testing.

7-27. Other special experimental interest or unique validation requirements may also arise. These requirements shall be submitted no later than 2 months prior to the start of flight test. Methods and procedures shall be mutually-developed and published prior to the start of aircraft integration testing.

7.12 Flight Crew Staffing Requirements

7.12.1 Support personnel from AirSC

7-28. Standard support personnel to operate the Transport Research System shall be provided.

7.12.2 Researchers & Observers

Researchers will include personnel from NASA/LaRC, Rockwell-Collins, BAE Systems, Research Triangle Institute, Ohio University, University of Iowa, Marinvent, Jeppesen, Rannoch, Raytheon, and Boeing.

7-29. The Technology Transfer Area (TTA) shall be made available whenever SVS flight-testing is in progress. Maximum seating possible in the TTA is requested, subject to the constraints of 7-32.

7-30. During evaluation runs, at least one seat, either Seat #3 or #4 in the cockpit, shall be available for a researcher. If a NASA/LaRC pilot is serving as an evaluation pilot, either Seat #3 or #4 shall be available for a researcher and both Seats #3 and #4 are requested for researchers/observers.

7-31. The seating requirements for researchers in the cabin area shall be as follows:

1) NASA SVDC – Three seats in a single row at the NASA-SVDC pallet (identical to that of the SVS-EGE flight test) shall be provided.
2) R-C / BAE – Three seats in a single row at the pallet (identical to that of the SVS-EGE flight test) shall be provided. Accommodations shall be provided in either the TTA or other unoccupied seats in the cabin area for the industry customers not currently occupying the pallet location.
3) DIME – Two seats, side-by-side shall be provided with keyboard, monitor, and cursor control device interfacing with the DIME computer.
4) RIPS -Two seats, side-by-side shall be provided with keyboard, monitor, and computer access to the SGI/Onyx computer (possibly remote). Also,

one seat, with keyboard, monitor, and computer access to the SGI/Onyx computer shall be provided at the SGI/Onyx operations pallet.

5) SV Sensors – Three seats in a single row at the SV Sensors pallet (identical to that of the SVS-EGE flight test) shall be provided. The second row of three seats immediately behind the SV Sensors pallet should also be provided.

7-32. Observers will be designated by a designated AvSP person in a similar manner to that employed during the SVS-EGE flight test. In general, the seating locations for observers shall be in the TTA area primarily, and secondarily, at the SVDC-1 (NASA pallet) and SVDC-2 (R-C/BAE pallet) pallets and Seats #3 and #4 in the cockpit.

7.13 Photographic Requirements

7-33. Photographic support shall include ground-based and in-cockpit documentation and public-relations style photography.

7-34. Aerial photographic support shall be provided during NASA/LaRC local area operations and should be provided during RNO deployment operations if feasible.

7.14 Chase Requirements

None.

7.15 Ground Support Requirements (Equipment/Facilities)

7.15.1 Meteorological support

7-35. The reported runway visual range (RVR) at the test airport shall be recorded at 30 minute intervals when Instrument Meteorological Conditions prevail or are expected during the daily test period. To meet this requirement, an estimate of RVR shall be requested of airport personnel in such cases that no automated RVR measurement system is available at the test airport.

7-36. Weather briefings shall be provided to support local and remote operations.

7.15.2 Communications

7-37. Communications to the differential GPS ground station operator shall be provided. Communications with a NASA-program liaison stationed at relevant local area Air Traffic Control (ATC) facilities should be provided since SVS-EGE experience showed that this interface was extremely beneficial.

7.15.3 Telemetry

None.

7.15.4 Tracking

None.

7.15.5 Data

None.

7.15.6 Other

7-38. Equipment necessary to provide quick-look video and engineering unit data shall be provided as necessary to support operations of ARIES.

7-39. During the deployment to RNO, a location shall be provided to accommodate equipment and researchers to conduct post flight data analysis and software modifications.

7.16 Special System Pre-/Post-Flight Calibration Requirements

Pre-flight and post-flight calibration methods for terrain database alignment/aircraft positional accuracy, HUD alignment/optical performance, and FLIR pod alignment and image scaling (Section 7.11), while on deployment might be required.

Requirements for special pre-flight and post-flight calibration, if they arise, will be provided no later than 2 months prior to the start of flight integration.

8. REFERENCES

1. Baize, D., “2.6 Synthetic Vision Systems Project Plan”, Version IIIf, 11/28/01.
2. Bailey, R., “2.6.1. Commercial and Business Aircraft, SVS, Element Plan”, Version 3.0, 9/20/01.
3. Lewis, M.,“Aviation Safety Program Plan”, 8/1/99.
4. Norman, R.M., “SVS HUD Stroke Symbology Alignment NASA ARIES Aircraft Report of Results”, 6/25/01.
5. Bailey, R.; Arthur, J.; Harrah, S.; and Norman, R., “HUD Alignment for EGE 757 Deployment, Version 2.3”, PowerPoint file with Notes Page.
6. CMC Electronics, “Enhanced Vision System Millimetre Wave Image Radar Antenna/Transceiver Unit”, Document Number CMC4827-001, Revision A, 4/19/02.
7. Franklin, M., “NASA Aviation Safety Program Synthetic Vision Systems (SVS) Project Flight Test Requirements for BAE Systems on the NASA 757 ARIES”, 4/19/02.

9. APPENDICES

9.1 Appendix A. List of Acronyms

2U	computer of thickness 3 and ½ inches
ADS-B	Automatic Dependent Surveillance Broadcast
AGL	Above Ground Level
ALTM	Airborne Laser Terrain Mapping
ANP	Actual Navigation Performance
ATC	Air Traffic Control
AvSP	Aviation Safety Program
BAE	BAE Systems
CAB	Commercial and Business Jet
CDTI	Cockpit Display of Traffic Information
CFIT	Controlled Flight Into Terrain
DAS	Data Acquisition System
DEM	Digital Elevation Model
DFW	FAA Identifier for Dallas/Fort Worth International Airport
DGPS	Differential Global Positioning System
DIME	Database Integrity Monitoring Equipment
DPDS	Data Processing and Display System
EDCP	Experimental Display Control Panel
EGE	FAA Identifier for Eagle/Vail County Regional Airport
EMM	Electronic Moving Map
EP	Evaluation Pilot
ET	Enabling Technologies
EVS	Enhanced Vision Systems
FDRS	Flight Deck Research Station
FLIR	Forward-Looking Infra-Red
FMS	Flight Management System
FSIL	Flight System Integration Laboratory
FTOSR	Flight Test Operations and Safety Report
GPS	Global Positioning System
GUI	Graphical User Interface
HDD	Head-Down Display
HGS	Head-up Guidance Systems
HUD	Head-Up Display
ICD	Interface Control Document
IFD	Integration Flight Deck
IMC	Instrument Meteorological Conditions
INS	Inertial Navigation System
IRU	Inertial Reference Unit
LCD	Liquid Crystal Display
LFI	FAA Identifier for Langley Air Force Base
LOC/DME	Localizer/Distance Measuring Equipment
MCP	Mode Control Panel

MFD	Multi-Function Display
MMWR	Millimeter-Wave Radar
MSL	Mean Sea Level
MTT	Multi-Target Tracking
NCAT	Non-Cooperative Aircraft Tracking
NAV	Navigation Display
NavD	Navigation Display
ND	Navigation Display
PC	Personal Computer
PDU	Pilot Display Unit
PF	Pilot Flying
PFD	Primary Flight Display
PHF	FAA Identifier for Newport News/Williamsburg International Airport
PNF	Pilot Not Flying
R-C	Rockwell Collins
RIAAS	Runway Incursion Advisory and Alerting System
RIPS	Runway Incursion Prevention System
RNO	FAA Identifier for Reno/Tahoe International Airport
RNP	Required Navigation Performance
RSIL	Research System Integration Laboratory
RSM	Runway Safety Monitor
RVR	Runway Visual Range
SDB	System Development Branch
SGS	Surface Guidance System
SV	Synthetic Vision
SVAD	Synthetic Vision Auxiliary Display
SVDC	Synthetic Vision Display Concepts
SVIS	Synthetic Vision Information System
SVS	Synthetic Vision System
SVS-RD	Synthetic Vision System-Research Display
SXGA	Video format, 1280x1024 pixels
TAWS	Terrain Awareness and Warning System
TBD	To-Be-Determined
TCAS	Traffic Alert and Collision Avoidance System
TFE	Terrain Feature Extraction
TTA	Technology Transfer Area
UAT	Universal Access Transceiver
VFR	Visual Flight Rules
VIP	Very Important Person
VMC	Visual Meteorological Conditions
VRS	Voice Recognition System
WAAS	Wide Area Augmentation System
WAL	FAA Identifier for Wallops Flight Facility
WIU	Wire Interface Unit
Wx	Weather
WxR	Weather Radar

XGA	extended Graphics Architecture, 1024x768 pixel resolution
Zx10	Dual-Pentium computer by Intergraph

Part II

Hardware Architecture for the Initial Synthetic Vision Systems Integrated Technology Evaluation Flight Test

Part II

Table of Contents

Table of Figures

This part of the document contains information pertaining to the complex, integrated hardware architecture that was realized to meet the requirements listed in Part I of this document. The system architecture was presented to a Critical Design Review Panel and approved for installation on the B-757 Airborne Research Integrated Experiments Systems (ARIES) airplane. This information includes a description of the equipment, block diagrams of the architecture, layouts of the workstations, and pictures of the actual installations.

1. HARDWARE DESCRIPTION

1.1 Head-Up Display (HUD)

The HUD consists of a Rockwell Collins HGS-4000 computer located in the Electronics Equipment (EE) bay, and an overhead projector, combiner glass, HUD control panel, and raster control panel located in the flight deck of the airplane.

1.2 SVS Head-Down Research Display (SVRD)

The SVRD is a dual-glass display installed in front of the pilot's main instrument panel in the flight deck. The display covers the pilot's primary flight displays and is removable in ten seconds or less.

1.3 Evaluation Pilot's Auxiliary Display (EPAD)

The EPAD is a portrait mode display located in the pilot's left side console, and can display either computer generated images, composite video images, or super video images.

1.4 Jump Seat Auxiliary Display (JSAD)

The JSAD is a landscape mode display mounted on the aft end of the center console. The JSAD is a repeater of the EPAD for viewing by the principal investigator during the flight.

1.5 Voice Recognition System (VRS)

The VRS is a speaker-independent recognition system and audio alerting system connected to the TRS for use by the research systems. It consists of a Push-To-Listen (PTL) button on the pilot's control column, a headset interface unit located on the aft end pilot's side console, and a computer located in the cabin of the airplane.

1.6 Vision Restriction Device (VRD)

The VRD is a piece of flame retardant material that obstructs the pilot's vision when he is flying. It is designed to limit the evaluation pilot's forward view while minimizing the obstruction to the safety pilot. The VRD is easily removed and has a flip-up portion that allows the pilot's vision to be totally blocked or limited to 300 feet.

1.7 Forward Looking Infrared (FLIR) camera pod

The FLIR pod is located under the nose of the airplane and consists of two IR cameras and a visual camera.

1.8 Research Radar System

The research radar system consists of a receiver/transmitter located in the forward EE bay and an antenna and pedestal located under the radome as well as support equipment located in the cabin.

1.9 BAE Millimeter wave Radar (mmWR) System

The mmWR system consists of a receiver/transmitter located under the radome, an Image Fusion Processor located in the forward cargo bay, and some support equipment located in the cabin. Since the mmWR and the weather radar radiate at two different frequencies, a special radome was also installed.

1.10 Cabin equipment

InSITE has two dedicated pallets consisting on 10 computers, numerous video distribution amplifiers and switches, two computer interface terminals, and eight displays to drive the displays in the cockpit. Another dedicated pallet, consisting of four computers, two computer interface terminals, two large screen displays, and radar isolation units, is used to interface with the FLIR and the research radar. In addition, the project has a three-processor computer and interface terminal to support DIME, and interfaces to provide high-resolution video in the TTA of the ARIES.

2. BLOCK DIAGRAMS AND LAYOUT DIAGRAMS

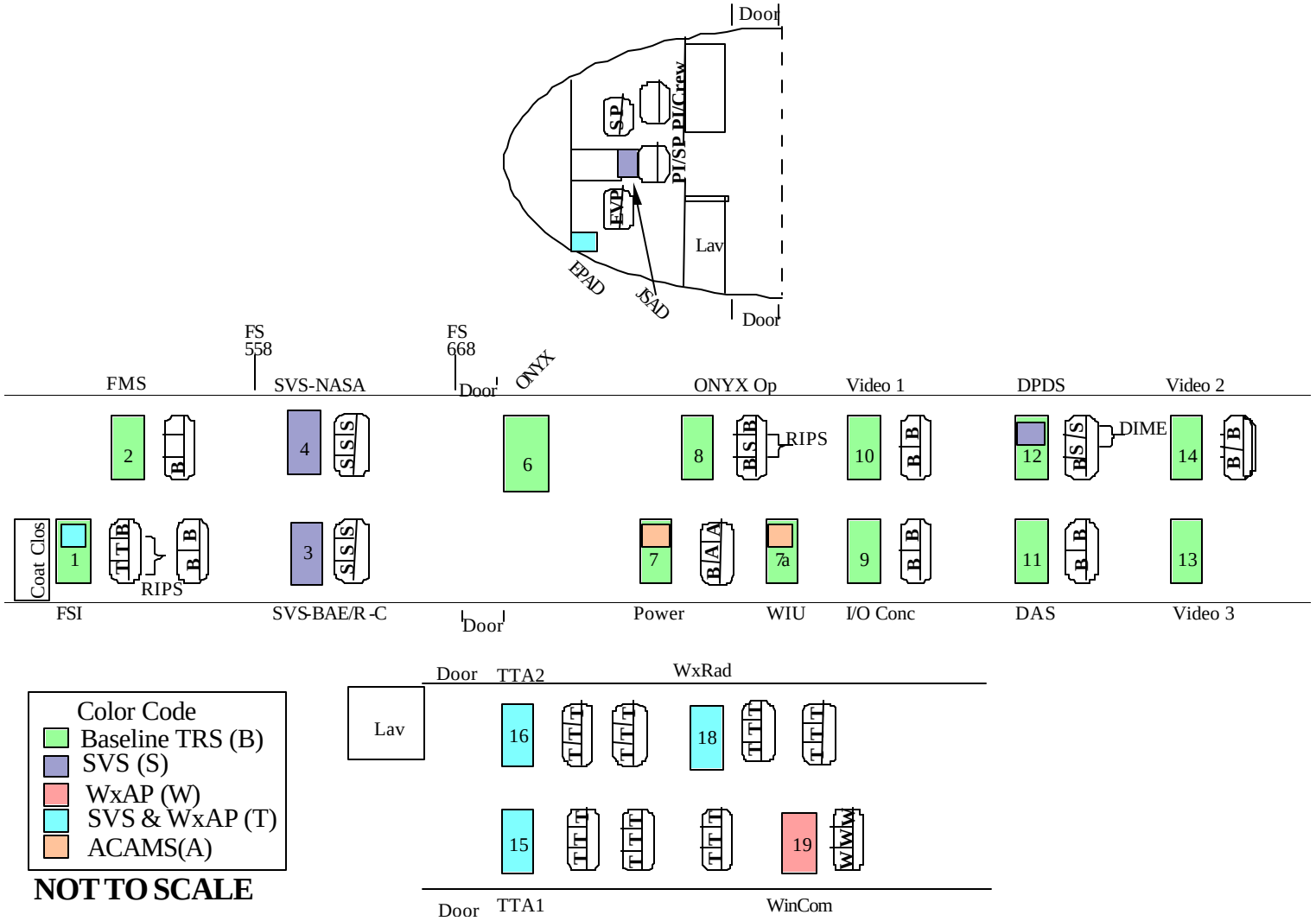

Figure 2.1. Cabin Layout for B-757 ARIES

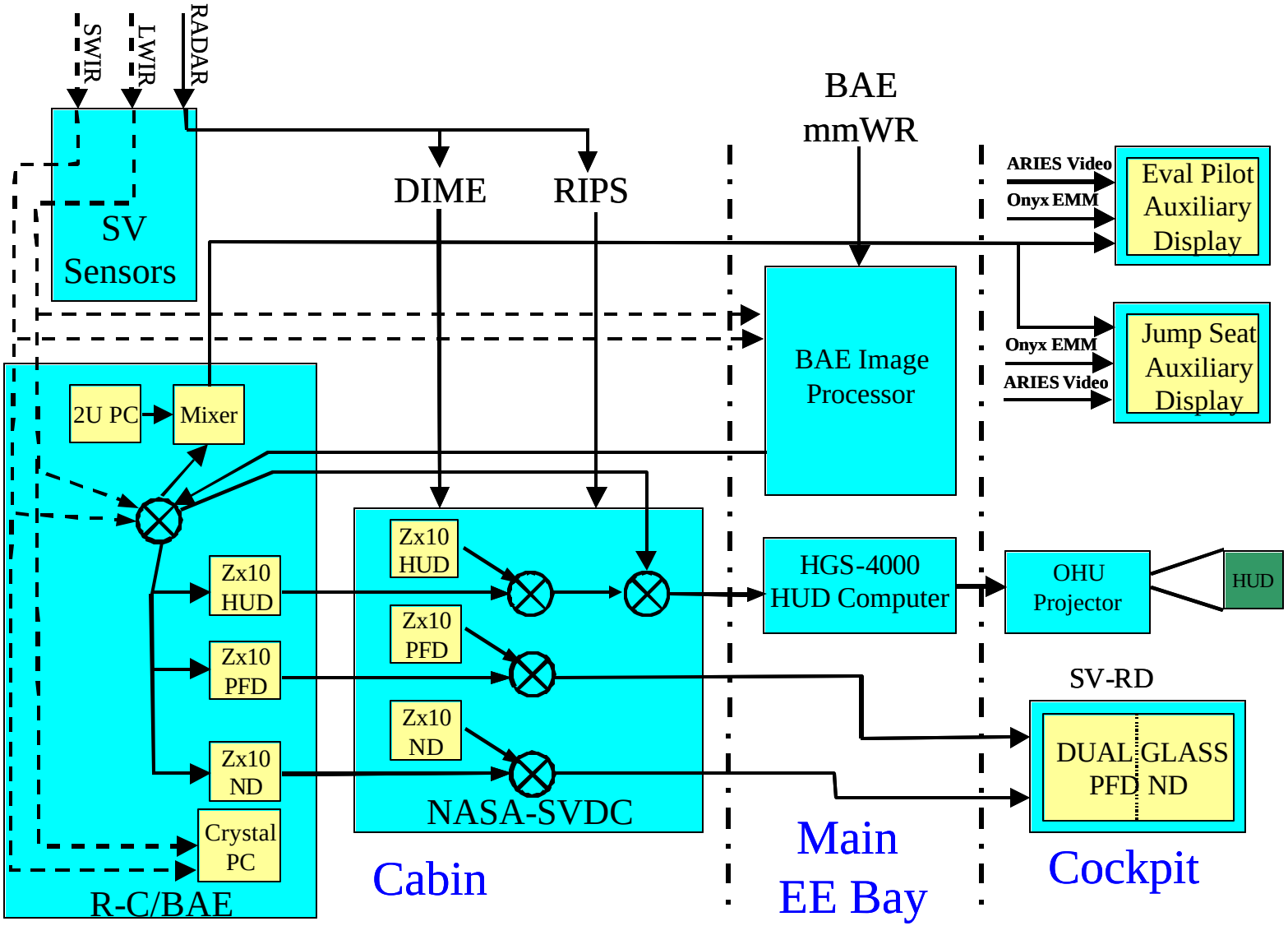

Figure 2.2. Overall Block Diagram

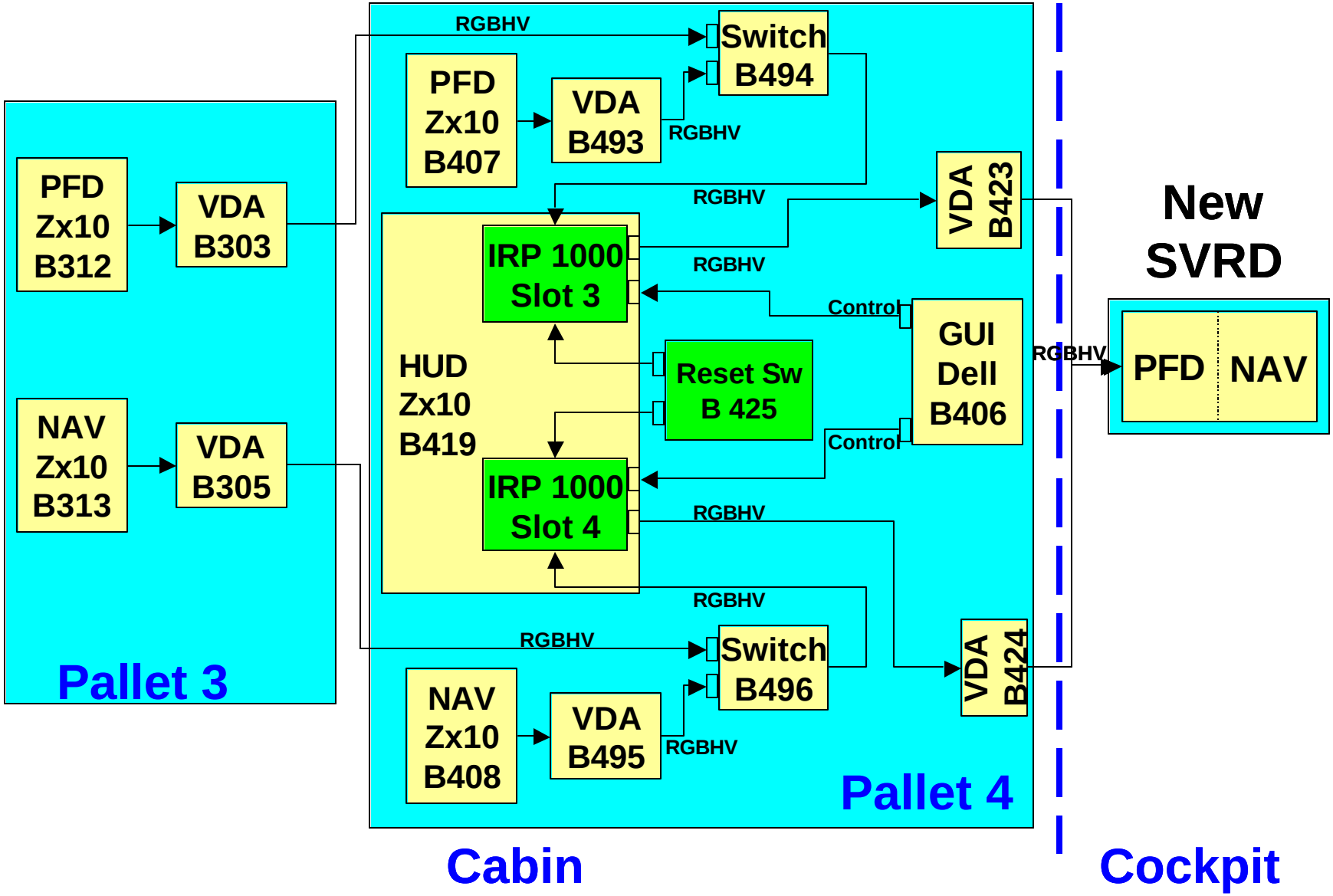

Figure 2.3. SVRD Block Diagram

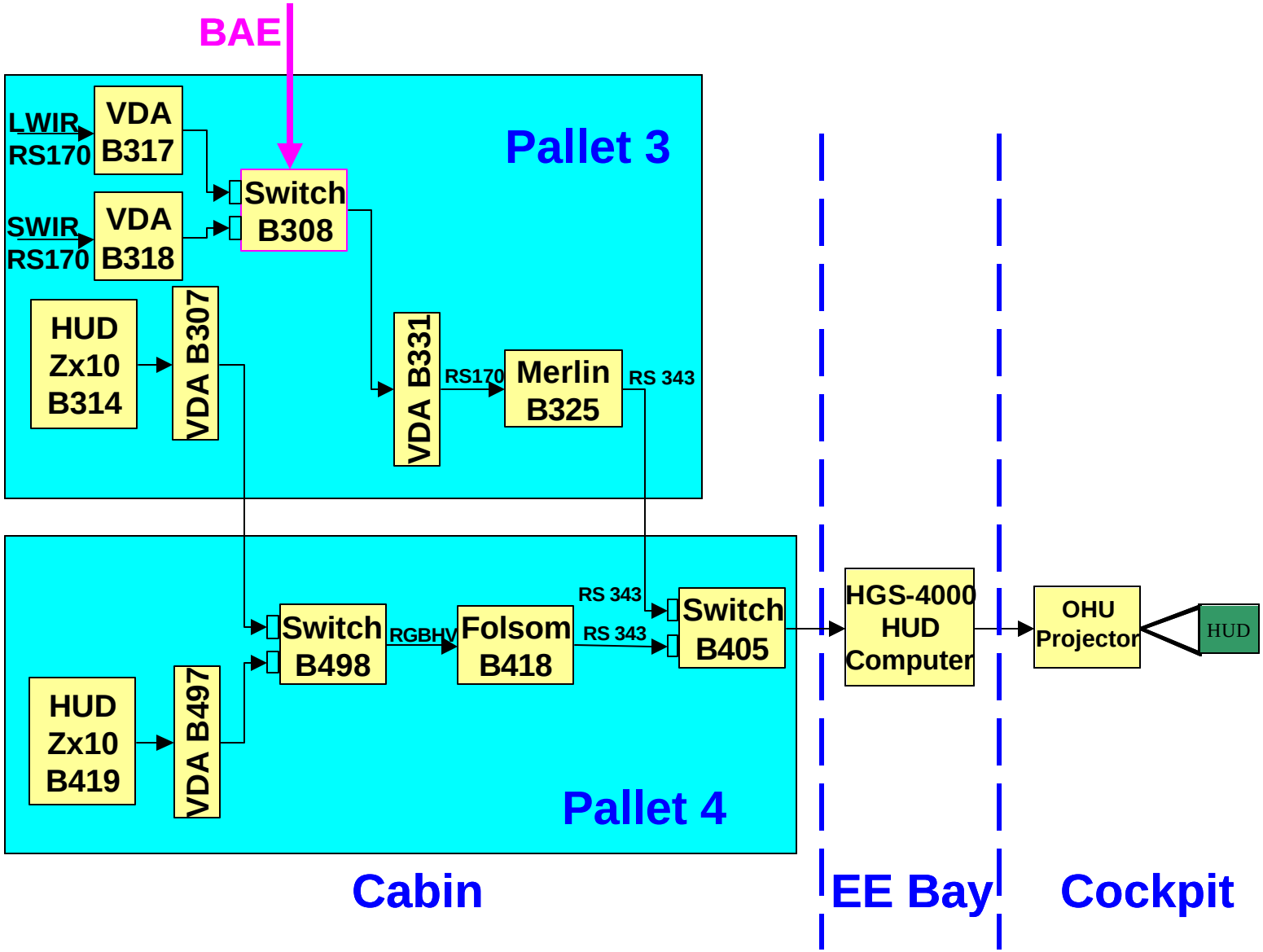

Figure 2.4. HUD Block Diagram

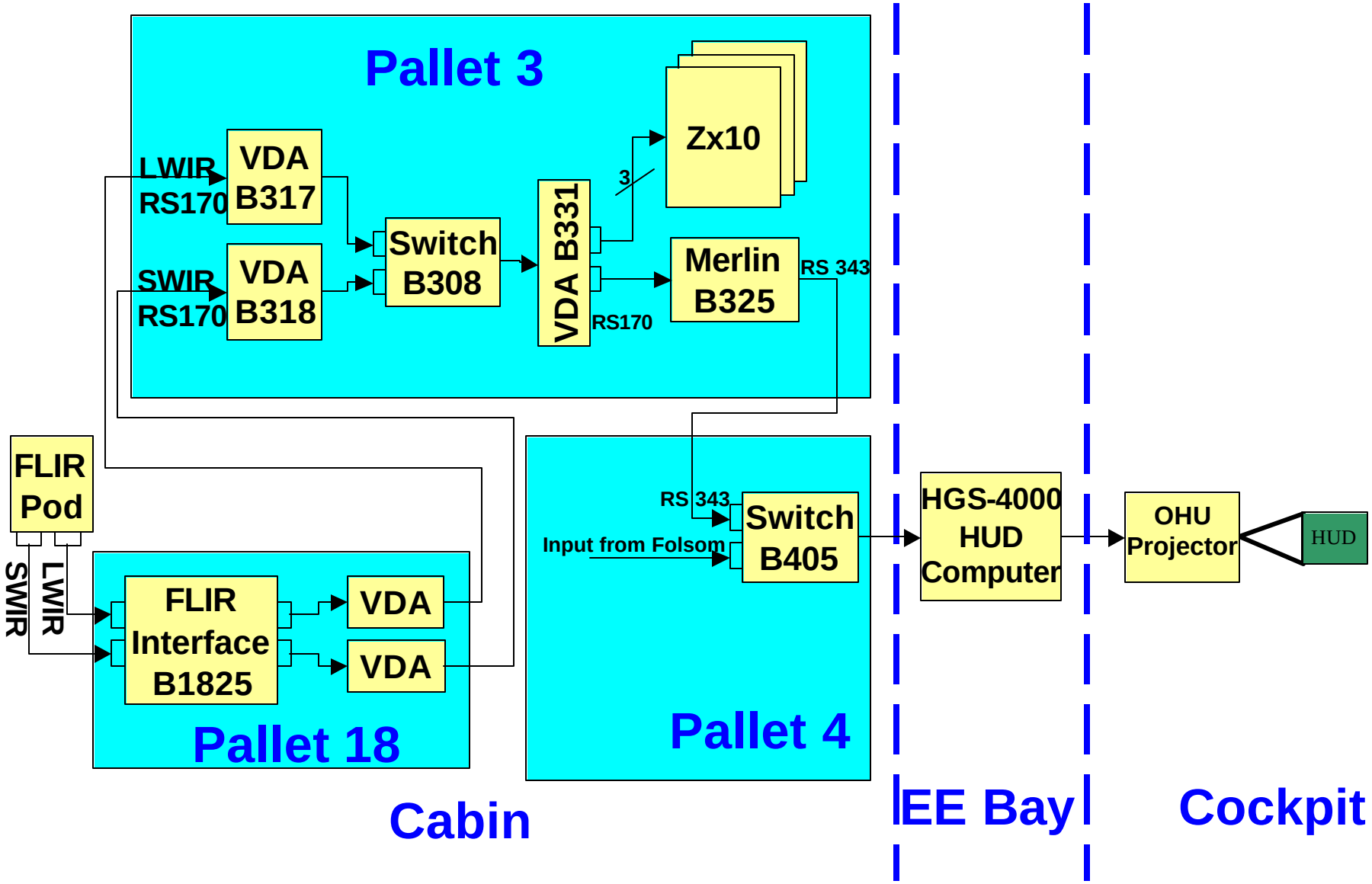

Figure 2.5. FLIR Signal Distribution Block Diagram

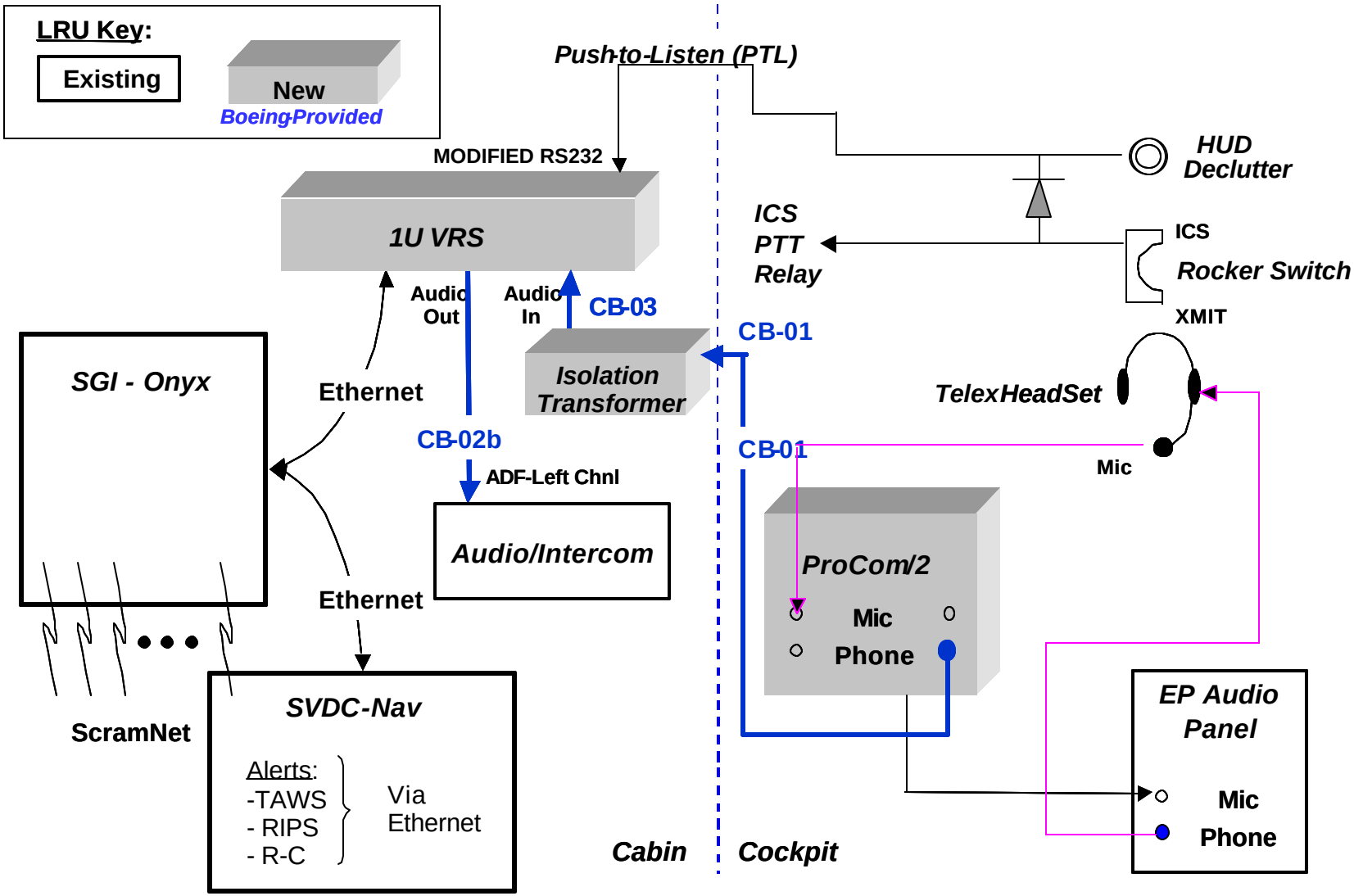

Figure 2.6. VRS Block Diagram

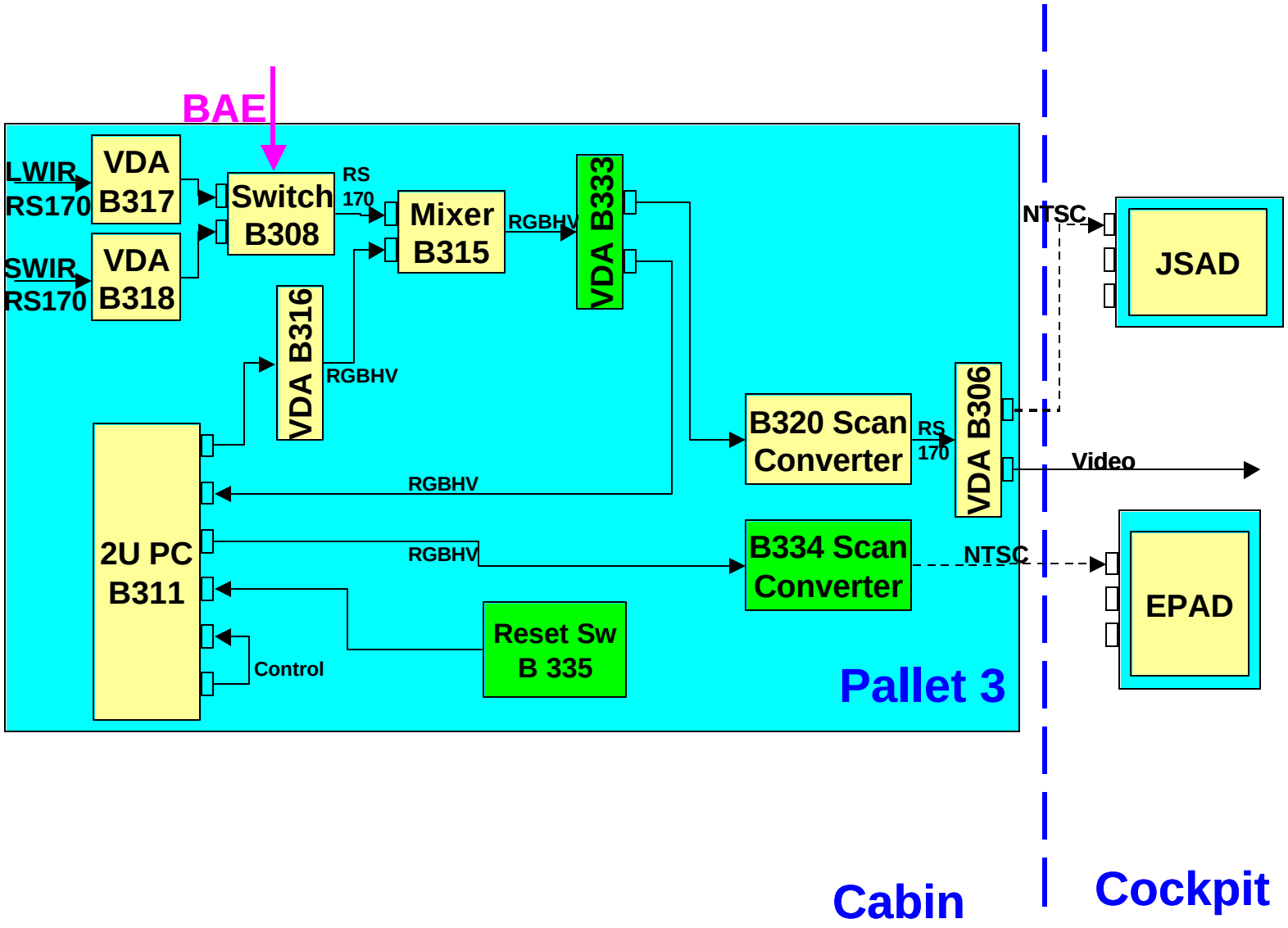

Figure 2.7. SV-AD Block Diagram (NTSC signals only)

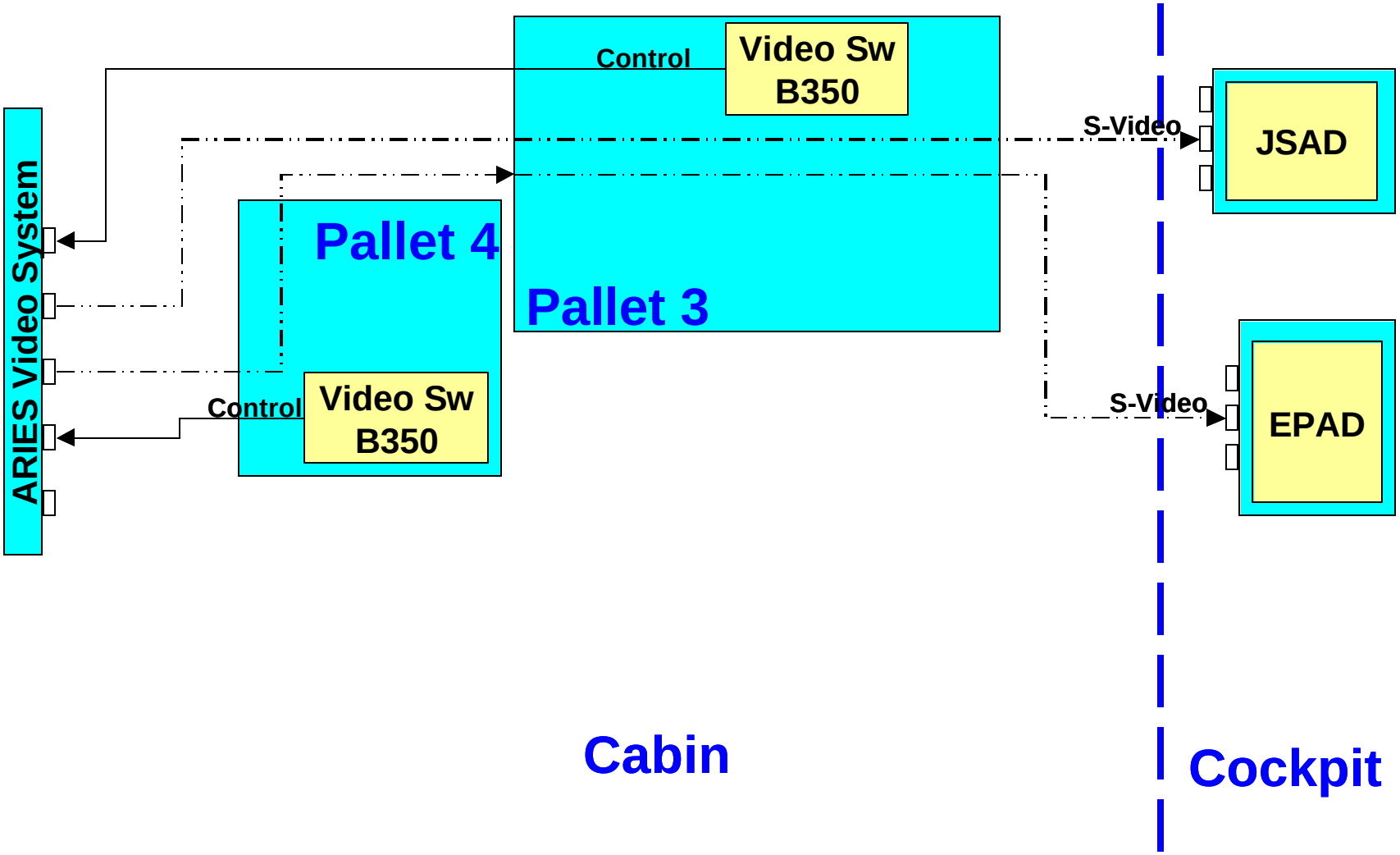

Figure 2.8. SV-AD Block Diagram (S-Video Signals only)

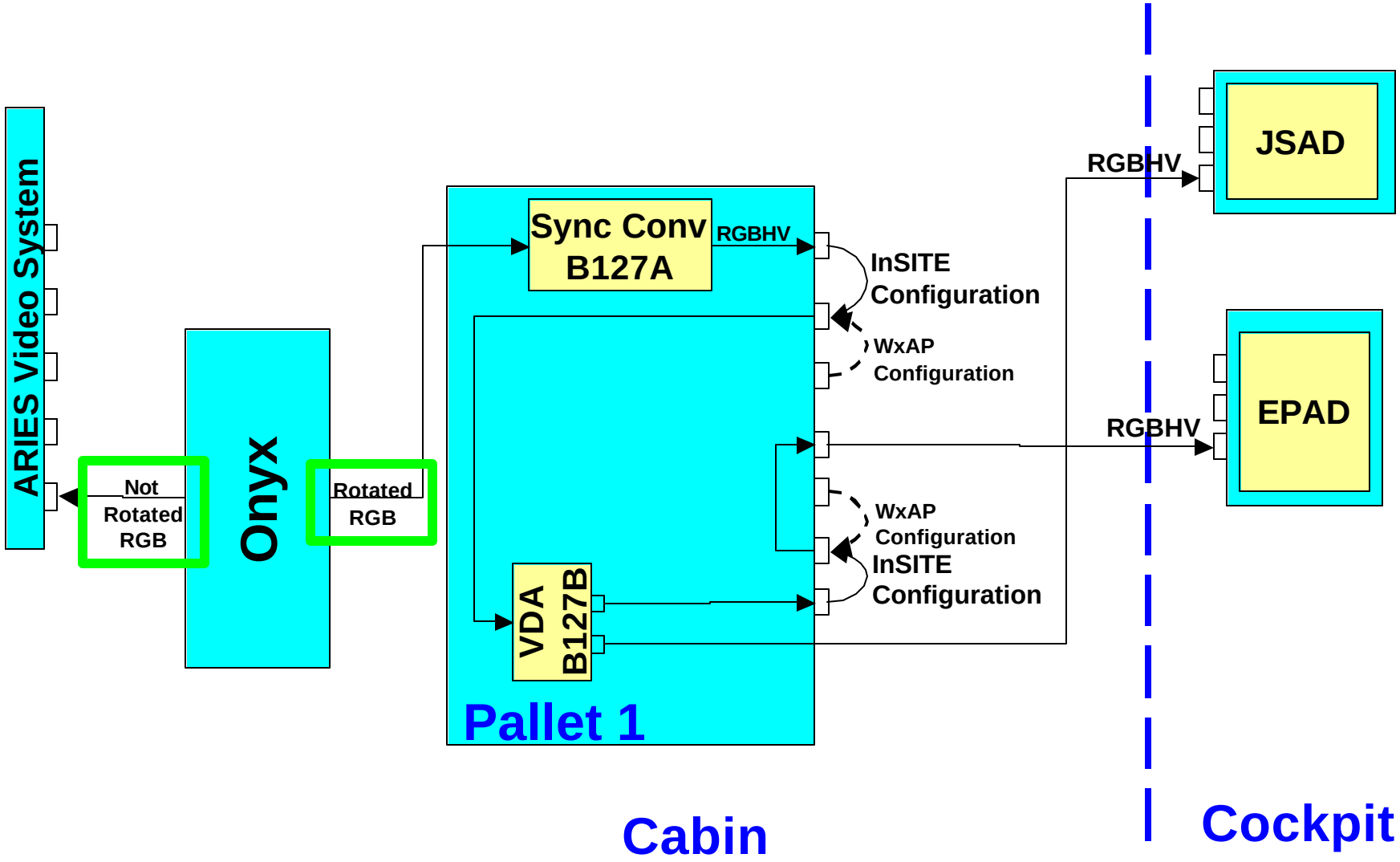

Figure 2.9. SV-AD Block Diagram (Computer Signals only)

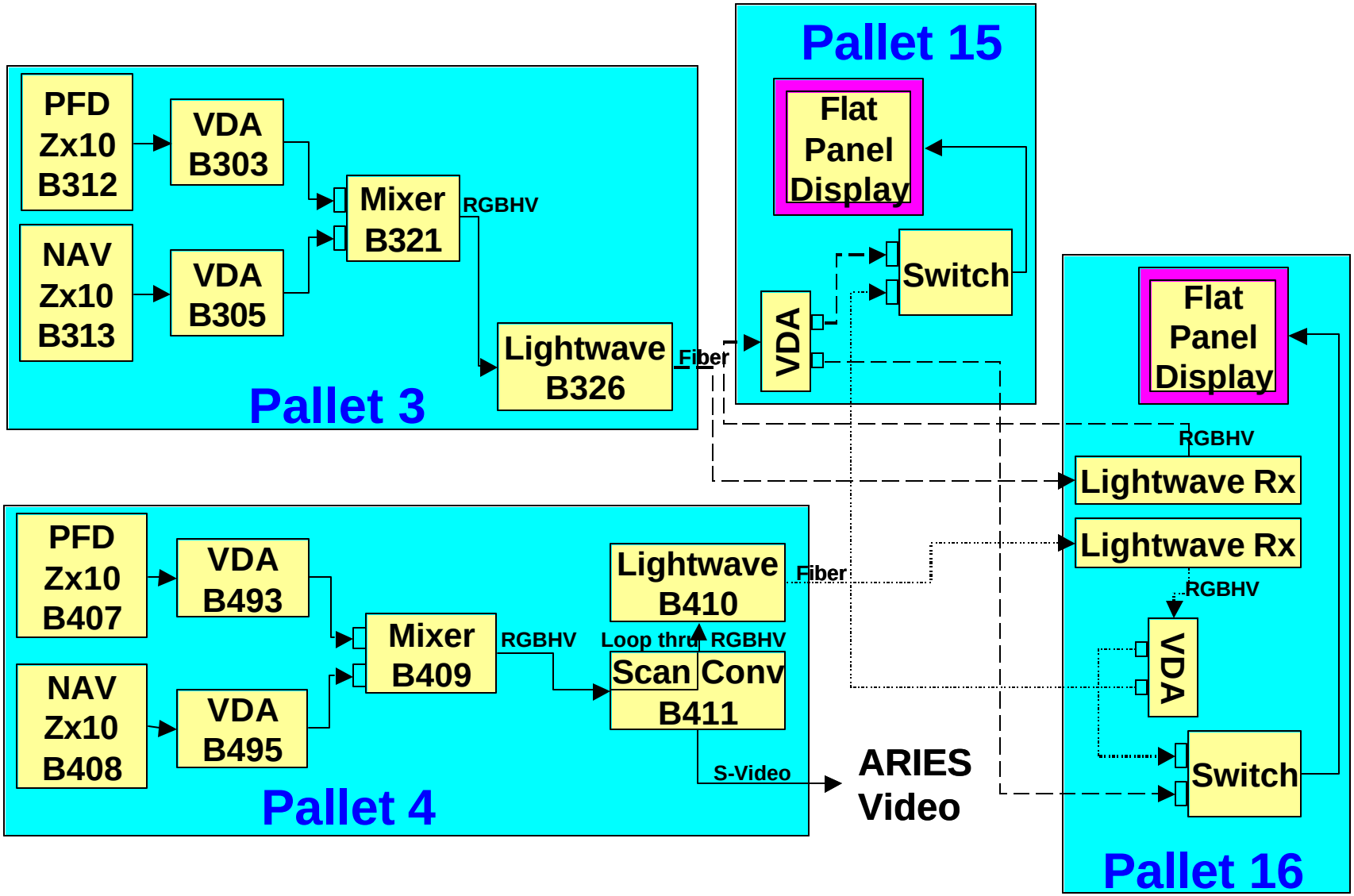

Figure 2.10. TTA Block Diagram

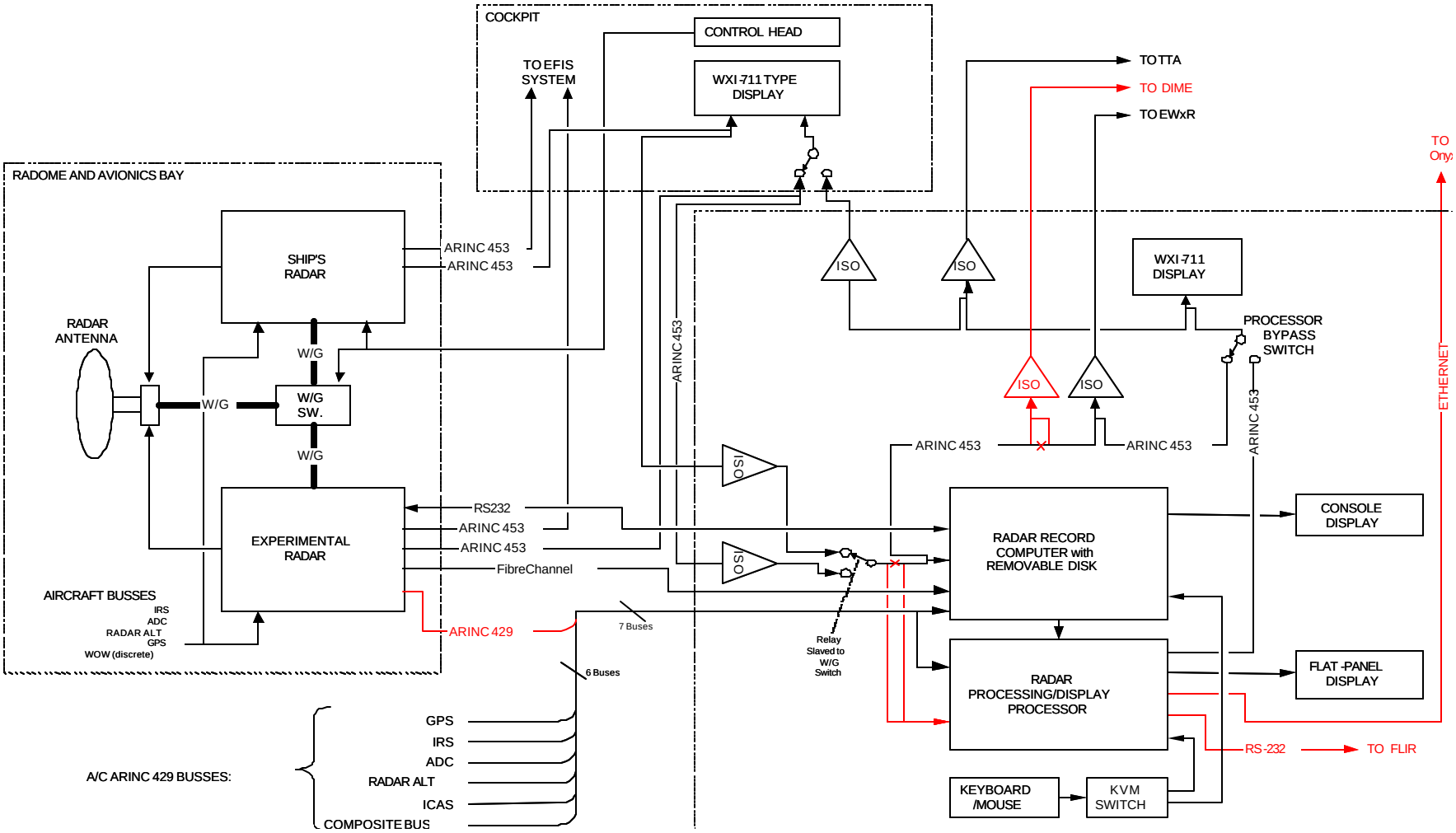

Figure 2.11. Radar Block Diagram

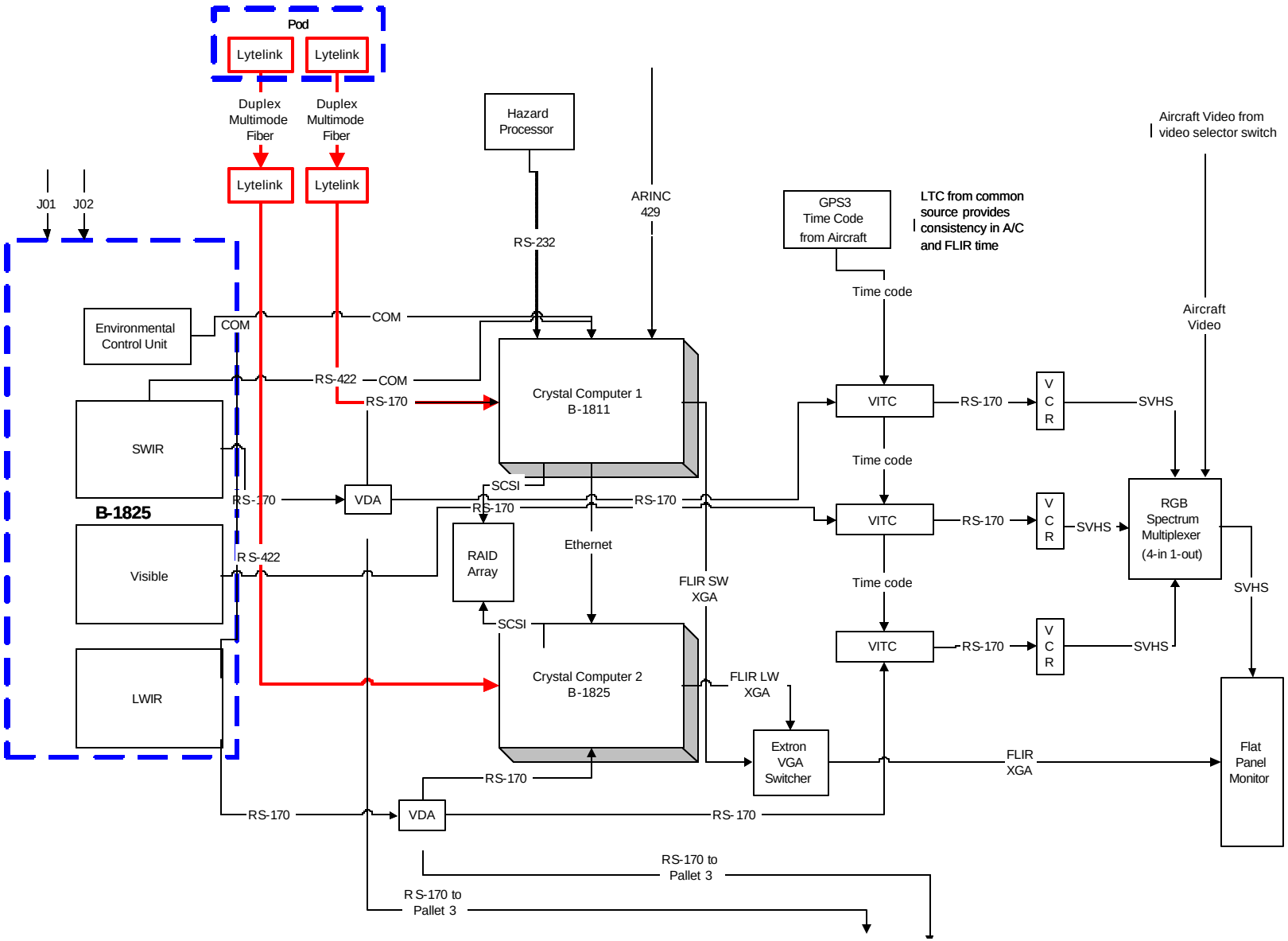

Figure 2.12. FLIR Block Diagram

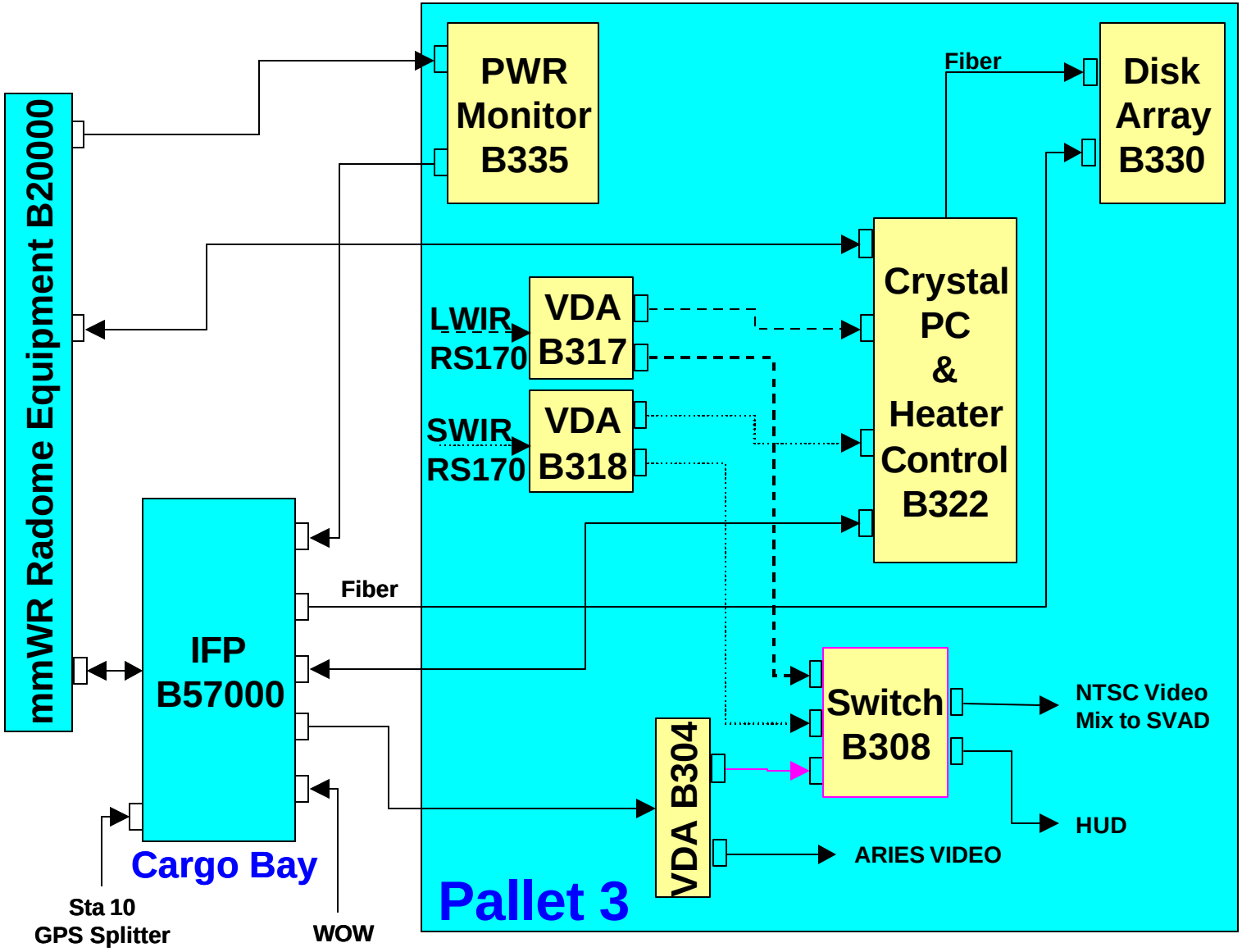

Figure 2.13. **BAE Block Diagram**

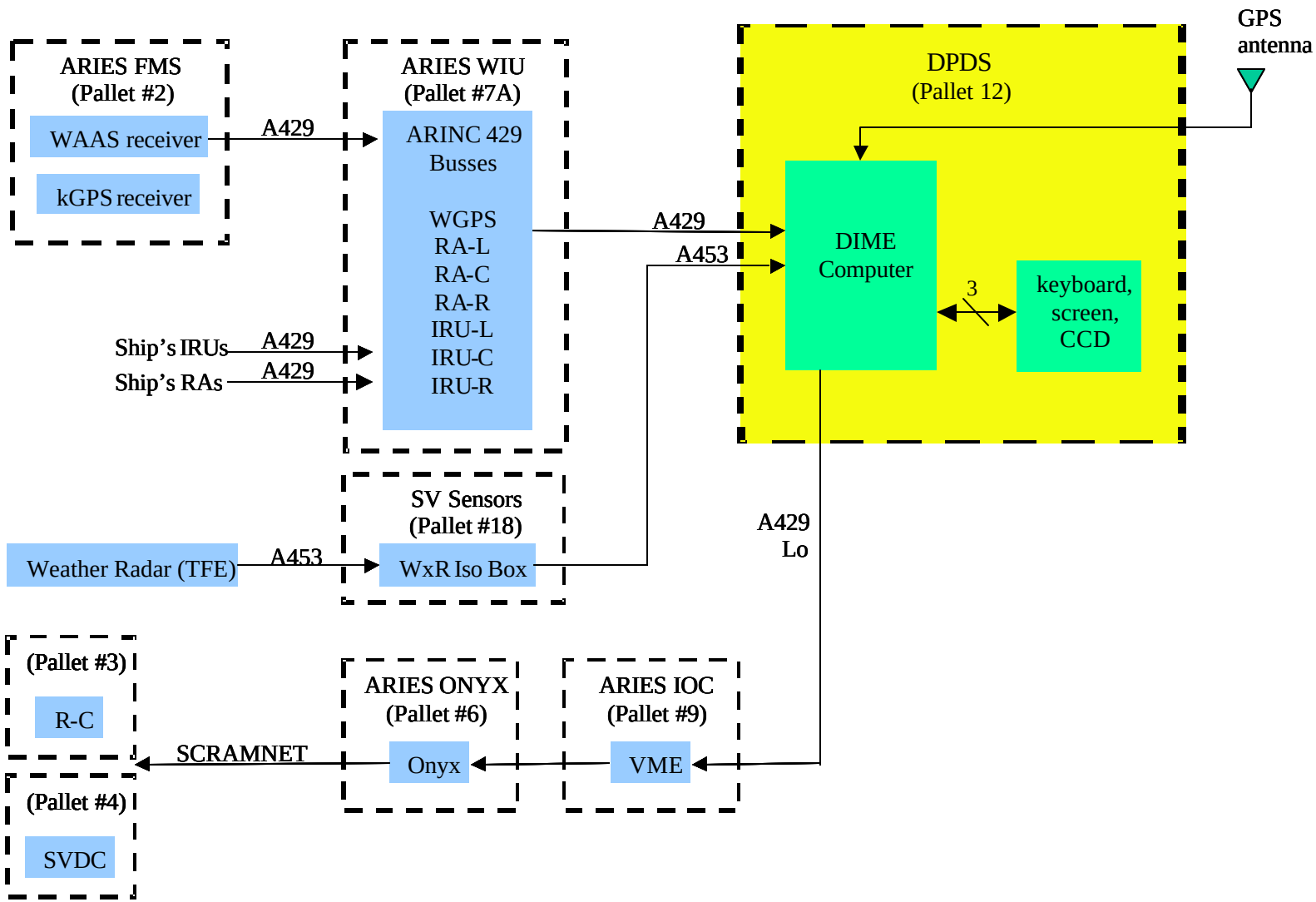

Figure 2.14. **DIME Block Diagram**

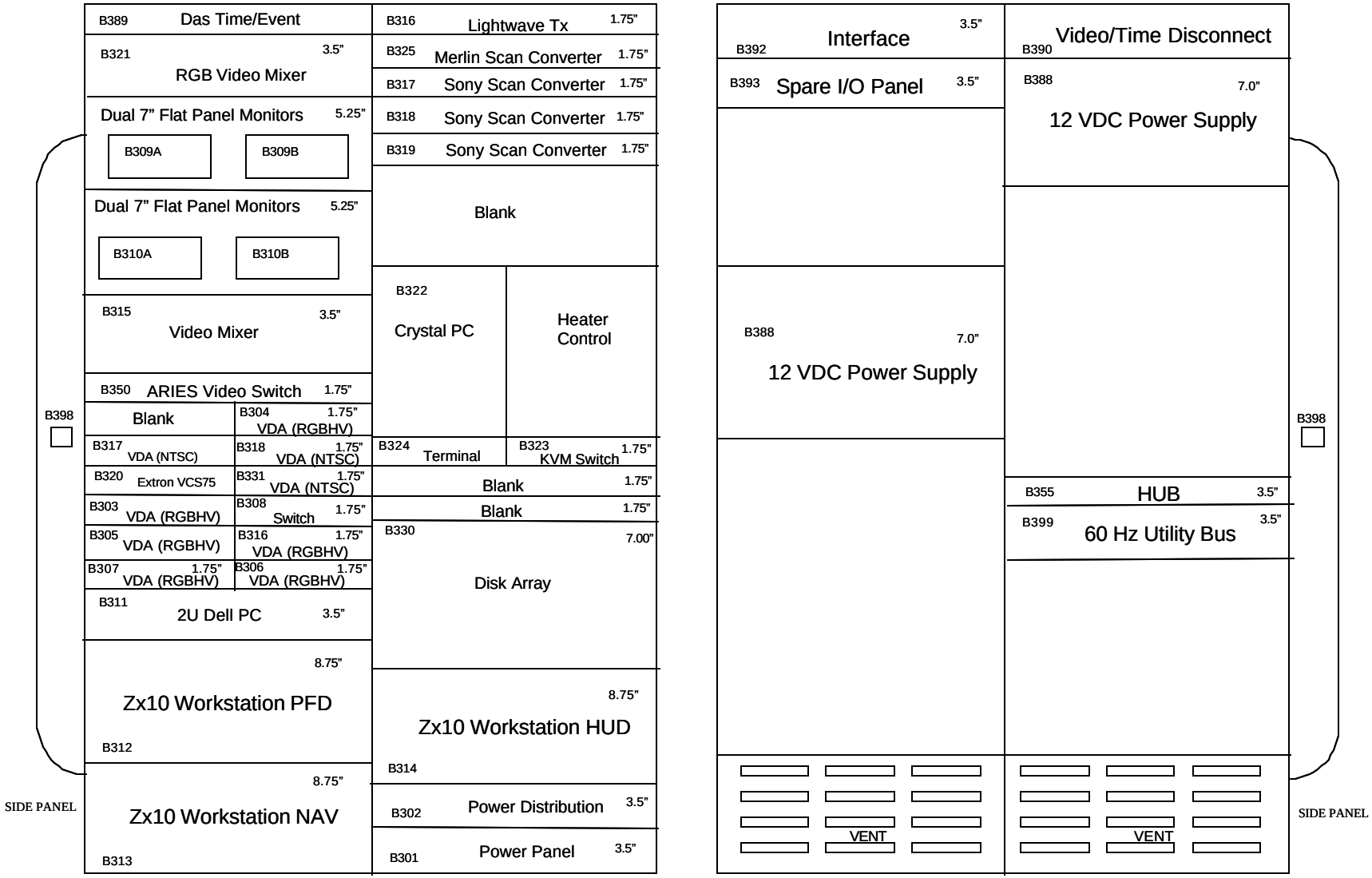

Figure 2.15. **Pallet 3-Industry SVS Concepts Workstation Layout**

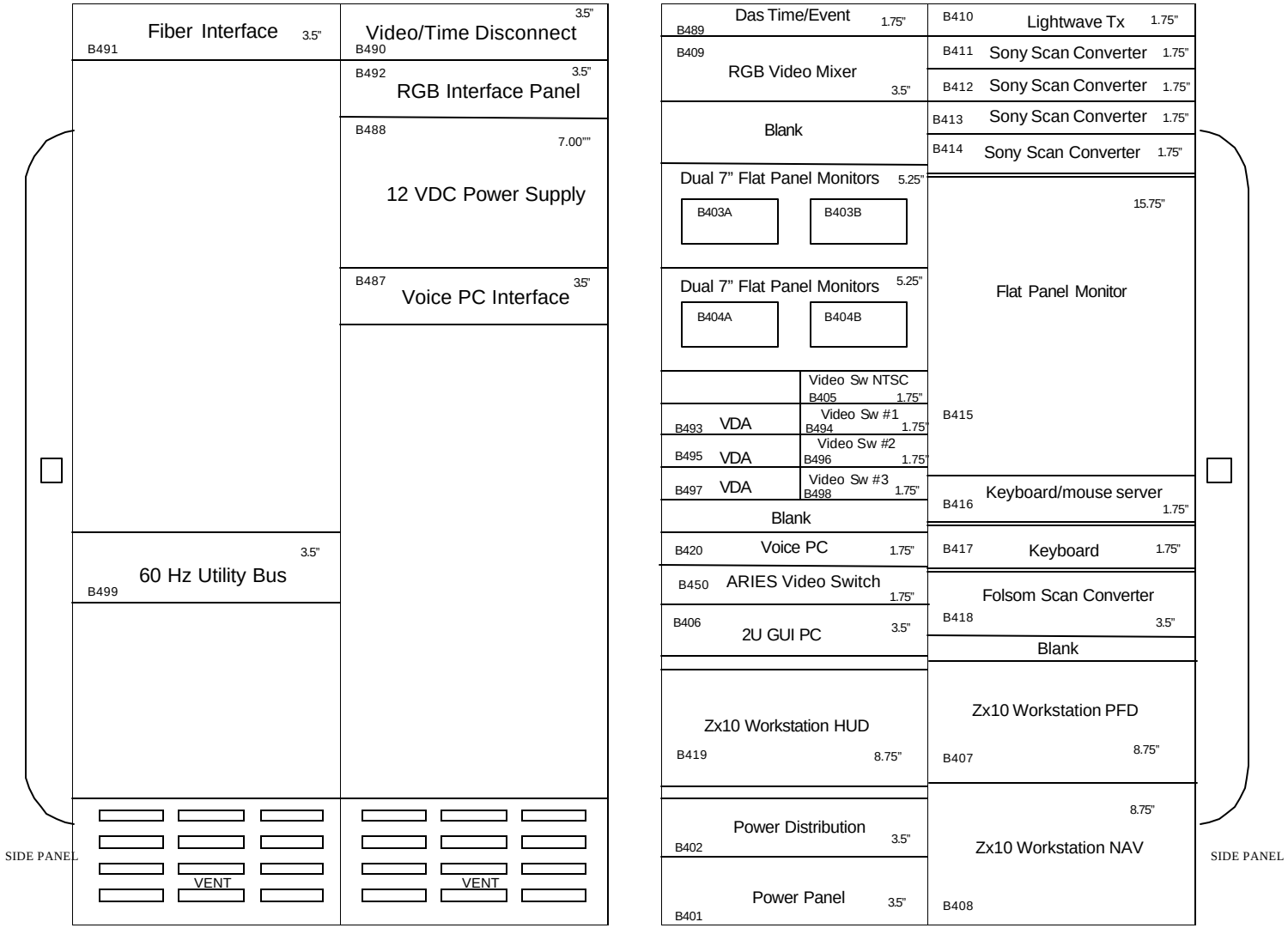

Figure 2.16. Pallet 4-NASA SVDC Workstation Layout

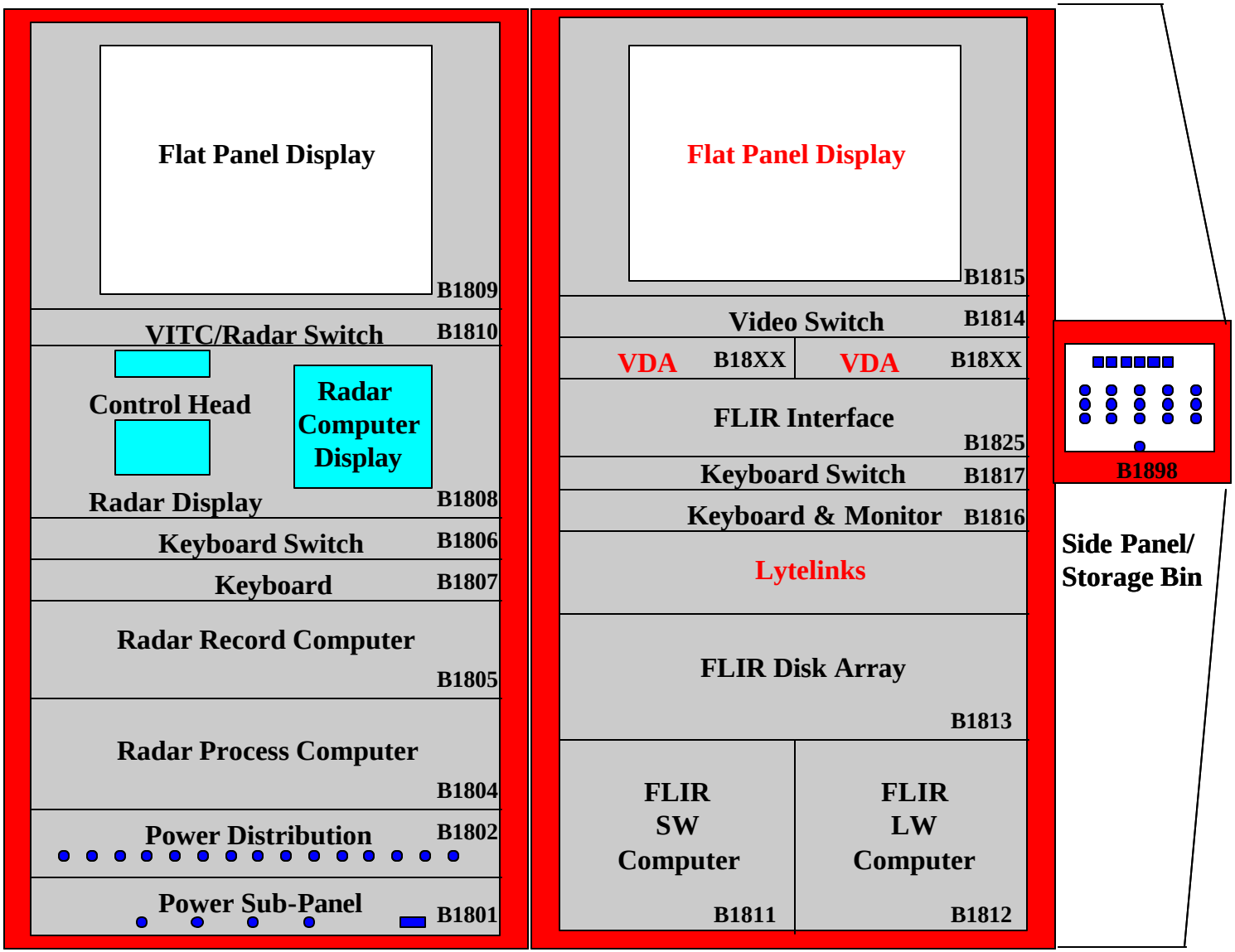

Figure 2.17. Pallet 18-Radar/FLIR Workstation Layout

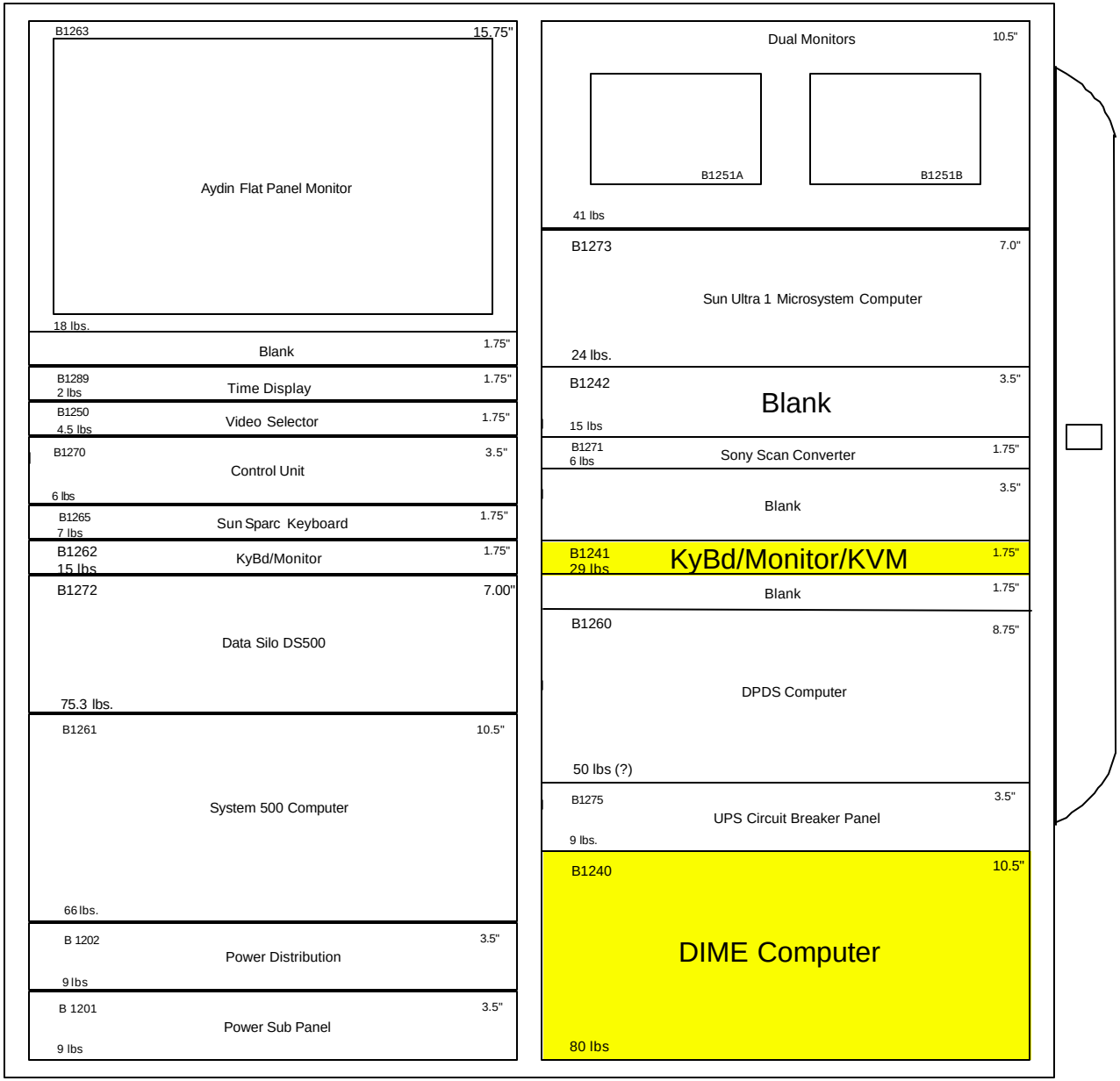

Figure 2.18. Pallet 12-DPDS/DIME Workstation Layout

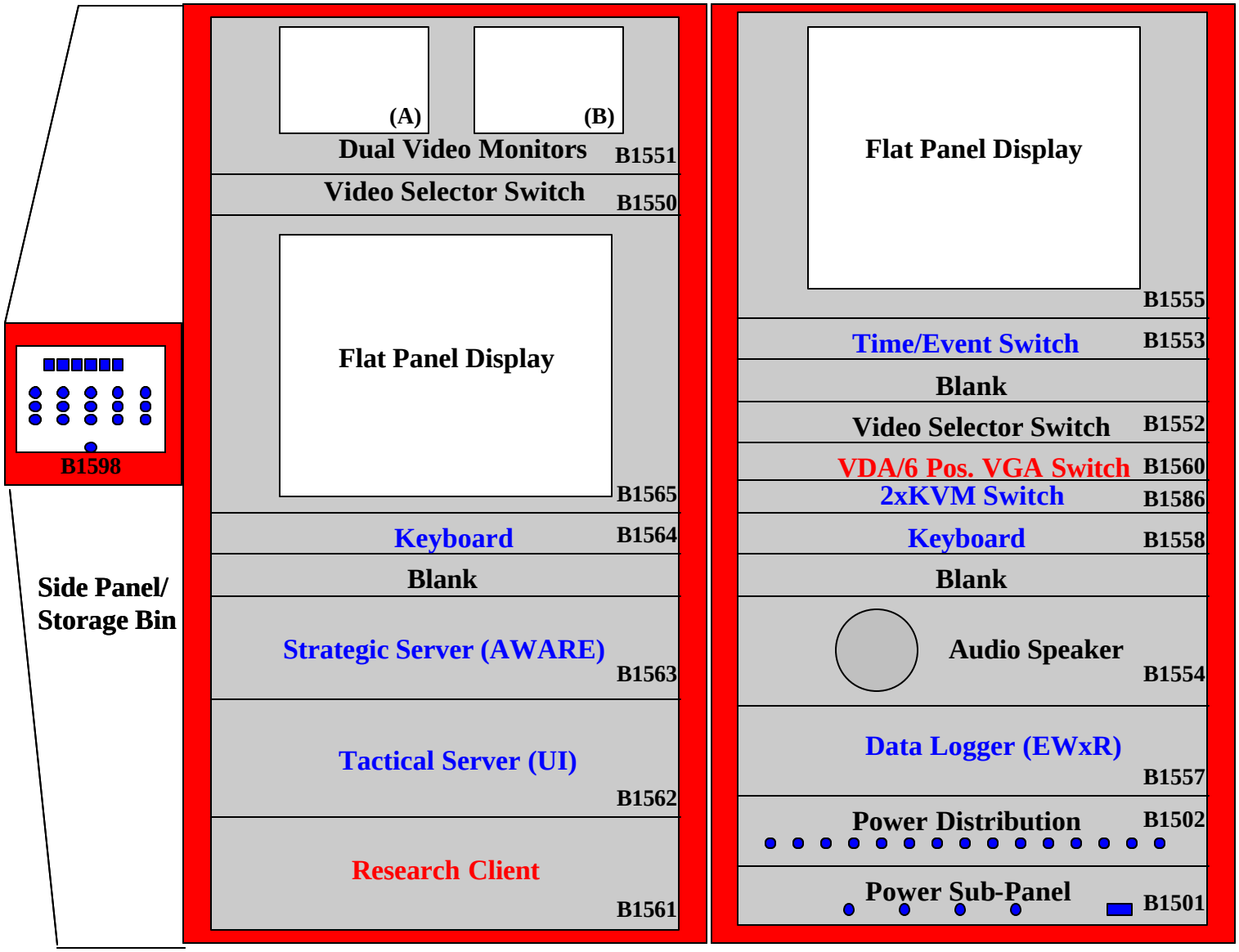

Figure 2.19. Pallet 15-TTA-1 Layout

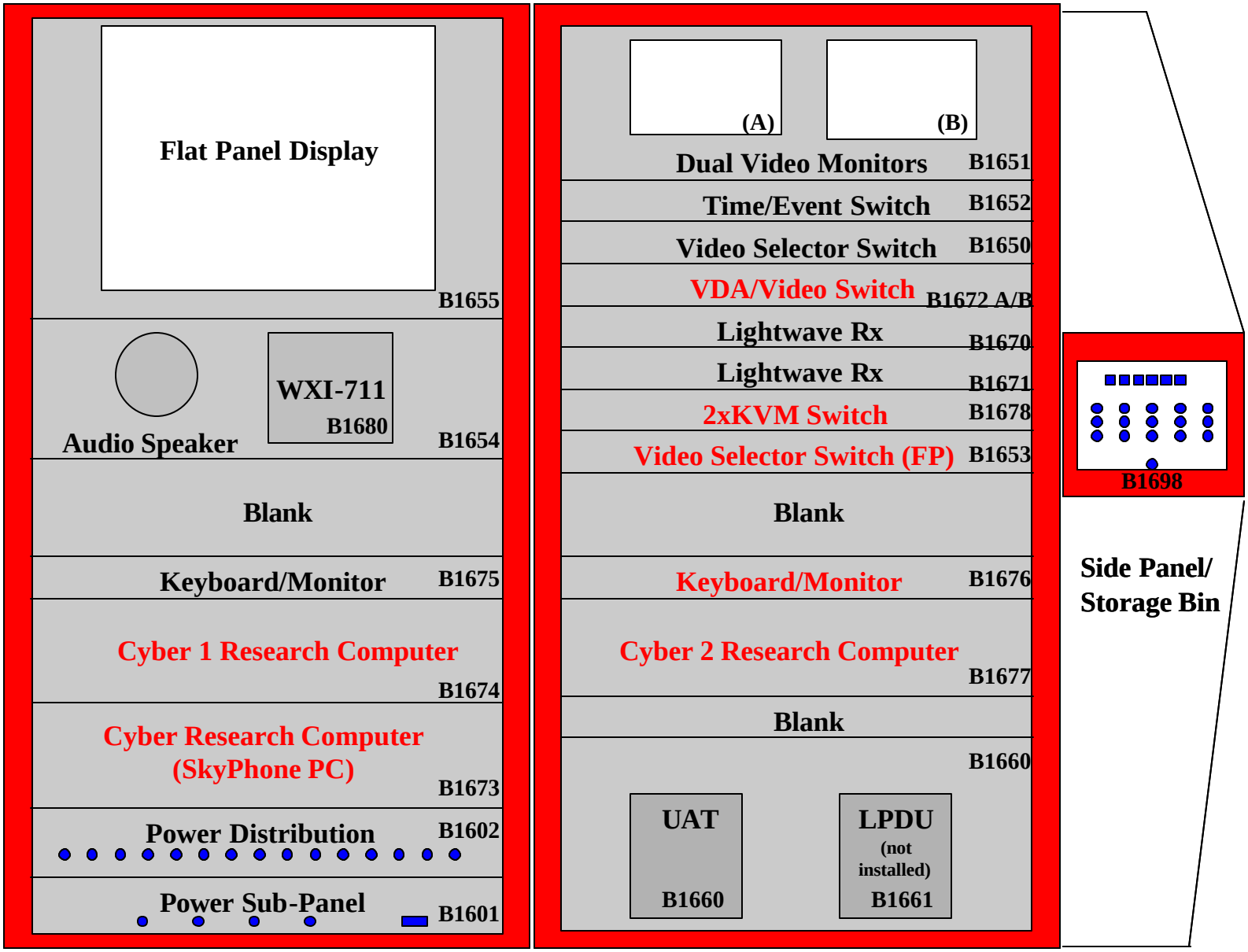

Figure 2.20. Pallet 16-TTA-2 Layout

3. PICTURES

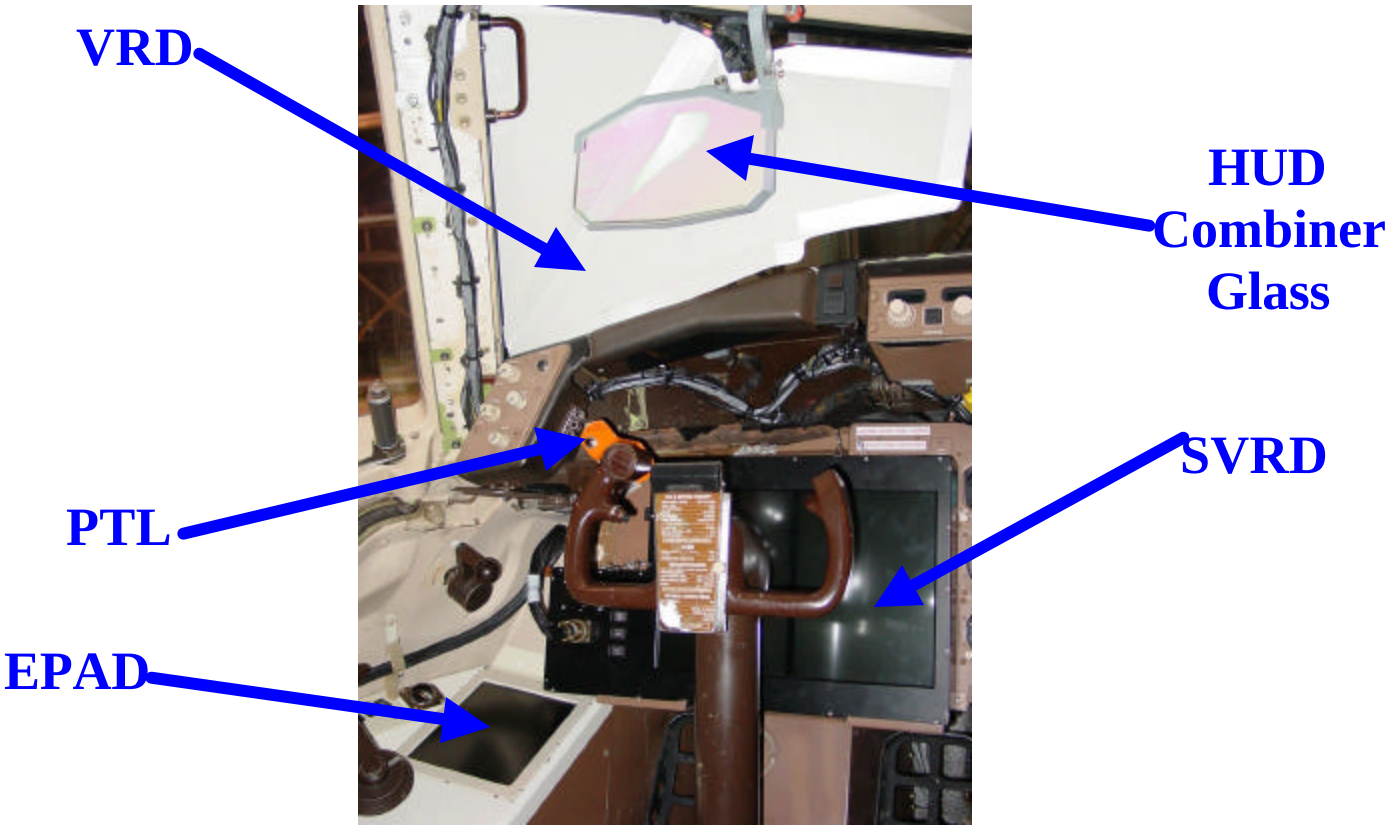

Figure 3.1. Cockpit Overview

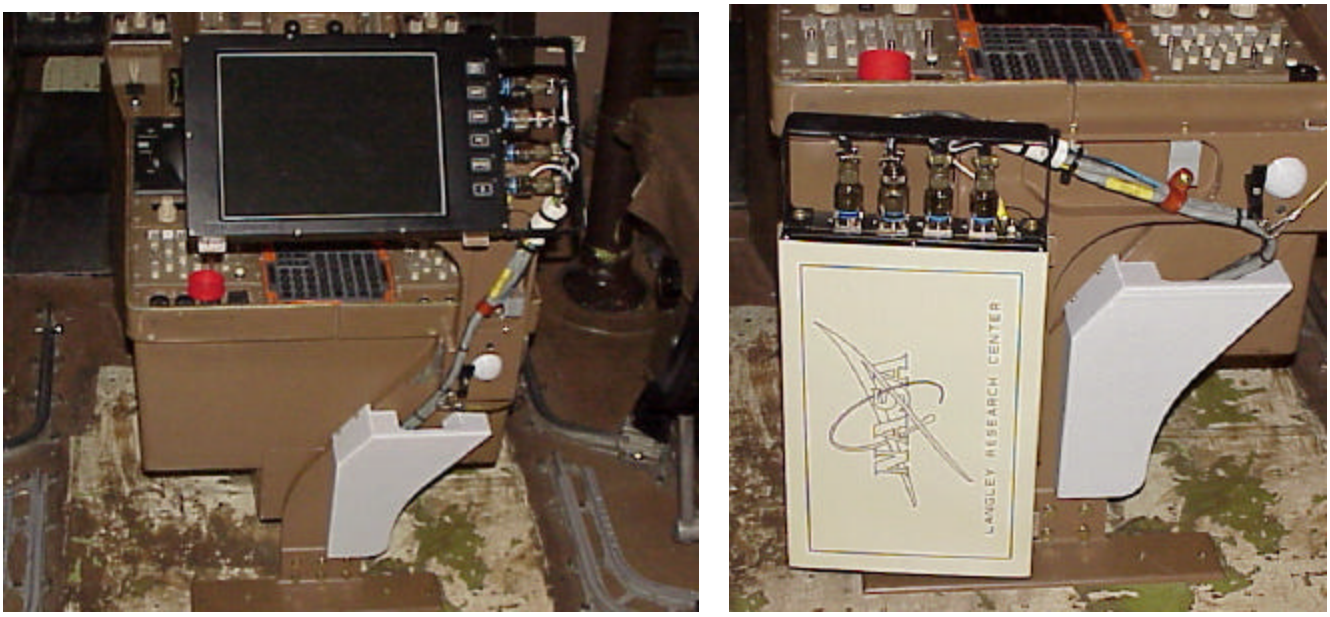

Figure 3.2. Jump Seat Auxiliary Display

Figure 3.3. VRS Headset Interface Unit

Figure 3.4. FLIR Pod

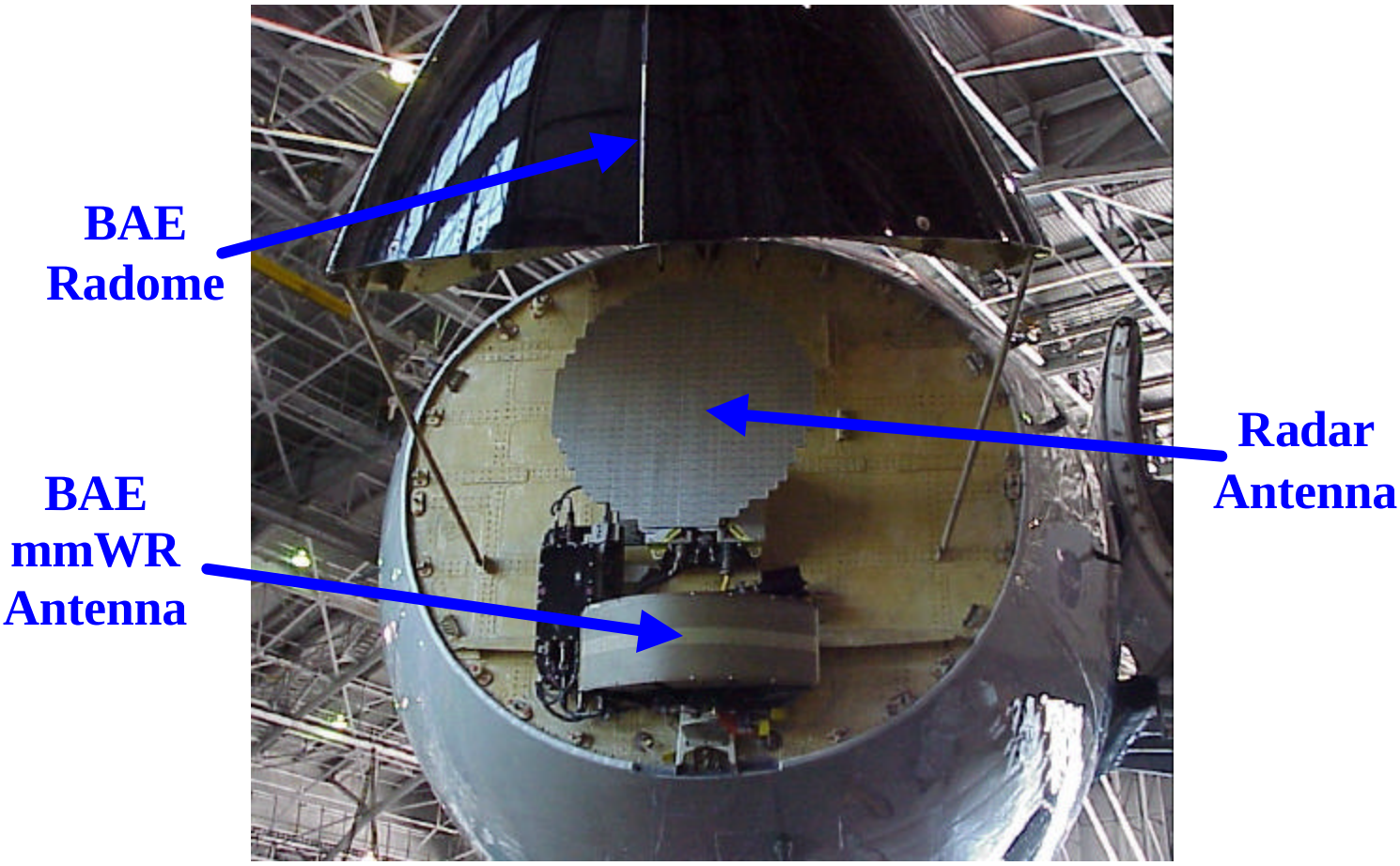

Figure 3.5. Radome Area Overview

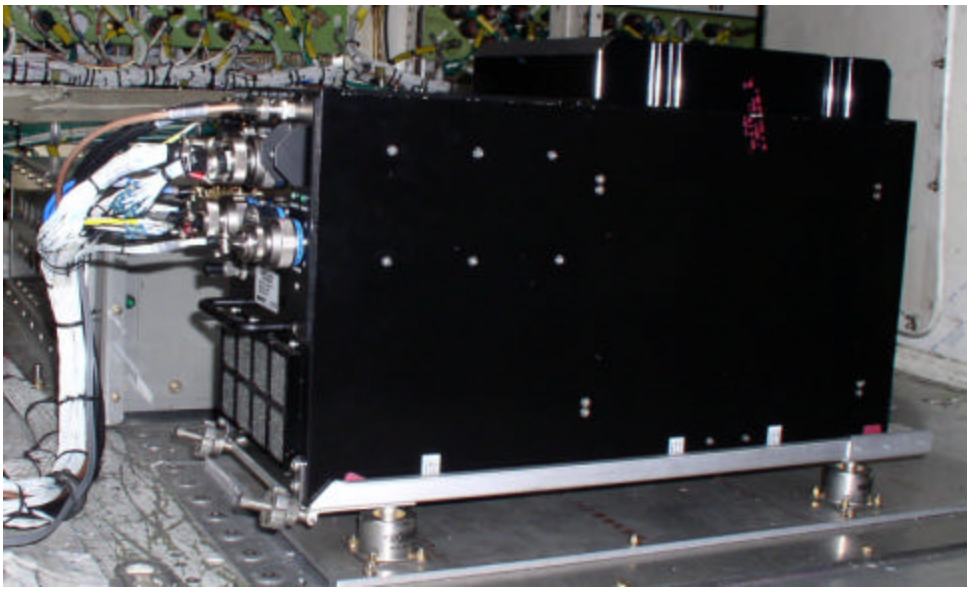

Figure 3.6. BAE Image Fusion Processor

Figure 3.7. Pallet 3-Industry SVS Concepts Workstation

Figure 3.8. Pallet 4-NASA SVDC Workstation

Figure 3.9. Pallet 18-Radar/FLIR Workstation

Figure 3.10. Pallet 12-DPDS/DIME Workstation

Figure 3.11. Pallet 15-TTA-1

Figure 3.12. Pallet 16-TTA-2

4. ACRONYMS

2U	2 rack units
ARIES	Airborne Research Integrated Experiments Systems
B##	B number-number assigned to unit, similar to serial number
BAE	BAE Systems
CCD	Computer Control Device
Conv	Converter
DAS	Data Acquisition System
DIME	Database Integrity Monitoring Experiment
DPDS	Data Processing and Display System
EE	Electronic Equipment
EMM	Electronic Moving Map
EP	Evaluation Pilot
EPAD	Evaluation Pilot Auxiliary Display
FLIR	Forward Looking Infrared
FMS	Flight Management System
GPS	Global Positioning System
GUI	Graphical User Interface
HUD	Head-Up Display
ICS	Inter Communication System
IFP	Image Fusion Processor
InSITE	INitial SVS Integrated Test Evaluation
IRP 1000	Folsom Rotation Card
IRU	Inertial Reference Unit
ISO	Isolation Unit
JSAD	Jump Seat Auxiliary Display
KGPS	Kinematics (differential) GPS
KVM	Keyboard, Video, Mouse unit
LWIR	Long Wave Infrared
mmWR	millimeter Wave Radar
NAV	Navigation
ND	Navigation Display
OHU	Overhead Projector Unit
PC	Personal computer
PFD	Primary Flight Display
PTL	Push-To-Listen
PTT	Push-To-Talk
PWR	Power
RA	Radio Altimeters
R-C	Rockwell Collins
RGBHV	Red, Green, Blue, Horizontal, vertical
Rx	Receiver
SP	Safety Pilot
SV	Synthetic Vision
SVDC	Synthetic Vision Display Concepts
SVRD	Synthetic Vision Research Display

SVS	Synthetic Vision Systems
SW	Switch
SWIR	Short Wave Infrared
TTA	Technology Transfer Area
Tx	Transmitter
VDA	Video Distribution Amplifier
VRD	Vision Restriction Device
VRS	Voice Recognition System
W/G	Wave Guide
WAAS	Wide Area Augmentation System
WGPS	WAAS GPS
WxAP	Weather Accident Prevention project
WxR	Weather Radar
Zx10	computer

5. ACKNOWLEDGEMENTS

The installation and implementation of the InSITE project on the B-757 ARIES aircraft was accomplished through the dedication and exceptional work of many diverse individuals. The list below is an acknowledgement of key people assigned to the project. The previous hardware architecture and pictures show the results of their hard work.

5.1 InSITE Implementation Team-Leads

Stella V. Harrison	InSITE Implementation Team Lead
Brian Hutchinson	InSITE Software Lead
David G. McLuer	InSITE Lead Technician
Donna Gallaher	DIME Lead
Kemper Kibler	VRS Lead
Edward Kirby	FLIR/Radar Lead
Wayne Burge	InSITE Procurement Lead

5.2 InSITE Implementation Team-Key Individuals

Jennifer Allen	Baseline DAS Lead Technician
Monica Barnes	Baseline Video Lead
Richard Chase	Baseline DPDS and IT Security Lead
Victoria Chung	Software Lead
James J. Fay	Baseline I/O Concentrator Lead
Keith Harris	Baseline DAS Lead
Charlie Haynes	Mechanical Fabrication Lead
Charles Howell	Baseline FMS Lead
Noel Hudgins	Electrical Fabrication Lead
Larry Johnson	Baseline Video Lead Technician
Robert M. Thomas	ARIES System Engineer
Paul Timbrell	HUD lead Technician
Mark Wynkoop	Fabrication Liaison

REPORT DOCUMENTATION PAGE

Form Approved
OMB No. 0704-0188

1. REPORT DATE *(DD-MM-YYYY)*
01- 09 - 2003

2. REPORT TYPE
Technical Memeorandum

3. DATES COVERED *(From - To)*

4. TITLE AND SUBTITLE
Initial SVS Integrated Technology Evaluation Flight Test Requirements and Hardware Architecture

5a. CONTRACT NUMBER

5b. GRANT NUMBER

5c. PROGRAM ELEMENT NUMBER

6. AUTHOR(S)
Stella V. Harrison, Lynda J. Kramer, Randall E. Bailey, Denise R. Jones, Steven D. Young, Steven D. Harrah, Jarvis J. Arthur, and Russell V. Parrish

5d. PROJECT NUMBER

5e. TASK NUMBER

5f. WORK UNIT NUMBER
23-728-60-85

7. PERFORMING ORGANIZATION NAME(S) AND ADDRESS(ES)
NASA Langley Research Center
Hampton, VA 23681-2199

8. PERFORMING ORGANIZATION REPORT NUMBER
L-18325

9. SPONSORING/MONITORING AGENCY NAME(S) AND ADDRESS(ES)
National Aeronautics and Space Administration
Washington, DC 20546-0001

10. SPONSOR/MONITOR'S ACRONYM(S)
NASA

11. SPONSOR/MONITOR'S REPORT NUMBER(S)
NASA/TM-2003-212644

12. DISTRIBUTION/AVAILABILITY STATEMENT
Unclassified - Unlimited
Subject Category 33
Availability: NASA CASI (301) 621-0390 Distribution: Nonstandard

13. SUPPLEMENTARY NOTES
An electronic version can be found at http://techreports.larc.nasa.gov/ltrs/ or http://ntrs.nasa.gov

14. ABSTRACT

This document presents the flight test requirements for the Initial Synthetic Vision Systems Integrated Technology Evaluation Flight Test to be flown aboard NASA Langley's ARIES aircraft and the final hardware architecture implemented to meet these requirements. Part I of this document contains the hardware, software, simulator, and flight operations requirements for this flight test as they were defined in August 2002. The contents of this section are the actual requirements document that was signed for this flight test. Part II of this document contains information pertaining to the hardware architecture that was realized to meet these requirements as presented to and approved by a Critical Design Review Panel prior to installation on the B-757 Airborne Research Integrated Experiments Systems (ARIES) airplane. This information includes a description of the equipment, block diagrams of the architecture, layouts of the workstations, and pictures of the actual installations.

15. SUBJECT TERMS
Synthetic Vision; Enhanced Vision; Flight operations; Navigation; Head-up display; Advanced Displays

16. SECURITY CLASSIFICATION OF:			17. LIMITATION OF ABSTRACT	18. NUMBER OF PAGES	19a. NAME OF RESPONSIBLE PERSON
a. REPORT	b. ABSTRACT	c. THIS PAGE			STI Help Desk (email: help@sti.nasa.gov)
U	U	U	UU	123	19b. TELEPHONE NUMBER *(Include area code)* (301) 621-0390

Standard Form 298 (Rev. 8-98)
Prescribed by ANSI Std. Z39.18