NASA/TM-2003-212666

Description of a Normal-Force In-Situ Turbulence Algorithm for Airplanes

Eric C. Stewart
Langley Research Center, Hampton, Virginia

December 2003

The NASA STI Program Office . . . in Profile

Since its founding, NASA has been dedicated to the advancement of aeronautics and space science. The NASA Scientific and Technical Information (STI) Program Office plays a key part in helping NASA maintain this important role.

The NASA STI Program Office is operated by Langley Research Center, the lead center for NASA's scientific and technical information. The NASA STI Program Office provides access to the NASA STI Database, the largest collection of aeronautical and space science STI in the world. The Program Office is also NASA's institutional mechanism for disseminating the results of its research and development activities. These results are published by NASA in the NASA STI Report Series, which includes the following report types:

- TECHNICAL PUBLICATION. Reports of completed research or a major significant phase of research that present the results of NASA programs and include extensive data or theoretical analysis. Includes compilations of significant scientific and technical data and information deemed to be of continuing reference value. NASA counterpart of peer-reviewed formal professional papers, but having less stringent limitations on manuscript length and extent of graphic presentations.

- TECHNICAL MEMORANDUM. Scientific and technical findings that are preliminary or of specialized interest, e.g., quick release reports, working papers, and bibliographies that contain minimal annotation. Does not contain extensive analysis.

- CONTRACTOR REPORT. Scientific and technical findings by NASA-sponsored contractors and grantees.

- CONFERENCE PUBLICATION. Collected papers from scientific and technical conferences, symposia, seminars, or other meetings sponsored or co-sponsored by NASA.

- SPECIAL PUBLICATION. Scientific, technical, or historical information from NASA programs, projects, and missions, often concerned with subjects having substantial public interest.

- TECHNICAL TRANSLATION. English-language translations of foreign scientific and technical material pertinent to NASA's mission.

Specialized services that complement the STI Program Office's diverse offerings include creating custom thesauri, building customized databases, organizing and publishing research results ... even providing videos.

For more information about the NASA STI Program Office, see the following:

- Access the NASA STI Program Home Page at ***http://www.sti.nasa.gov***

- E-mail your question via the Internet to help@sti.nasa.gov

- Fax your question to the NASA STI Help Desk at (301) 621-0134

- Phone the NASA STI Help Desk at (301) 621-0390

- Write to:
  NASA STI Help Desk
  NASA Center for AeroSpace Information
  7121 Standard Drive
  Hanover, MD 21076-1320

NASA/TM-2003-212666

Description of a Normal-Force In-Situ Turbulence Algorithm for Airplanes

Eric C. Stewart
Langley Research Center, Hampton, Virginia

National Aeronautics and
Space Administration

Langley Research Center
Hampton, Virginia 23681-2199

December 2003

Available from:

NASA Center for AeroSpace Information (CASI)
7121 Standard Drive
Hanover, MD 21076-1320
(301) 621-0390

National Technical Information Service (NTIS)
5285 Port Royal Road
Springfield, VA 22161-2171
(703) 605-6000

Description of a Normal-Force In-Situ Turbulence Algorithm For Airplanes

Eric C. Stewart
NASA Langley Research Center

Abstract

A normal-force in-situ turbulence algorithm for potential use on commercial airliners is described. The algorithm can produce information that can be used to predict hazardous accelerations of airplanes or to aid meteorologists in forecasting weather patterns. The algorithm uses normal acceleration and other measures of the airplane state to approximate the vertical gust velocity. That is, the fundamental, yet simple, relationship between normal acceleration and the change in normal force coefficient is exploited to produce an estimate of the vertical gust velocity. This simple approach is robust and produces a time history of the vertical gust velocity that would be intuitively useful to pilots. With proper processing, the time history can be transformed into the eddy dissipation rate that would be useful to meteorologists. Flight data for a simplified research implementation of the algorithm are presented for a severe turbulence encounter of the NASA ARIES Boeing 757 research airplane. The results indicate that the algorithm has potential for producing accurate in-situ turbulence measurements. However, more extensive tests and analysis are needed with an operational implementation of the algorithm to make comparisons with other algorithms or methods.

Notation

a_n	normal acceleration, g's
C_N	normal force coefficient, non-dimensional
$C_{N\alpha}$	normal force coefficient with angle of attack, $\frac{\partial C_N}{\partial \alpha}$, per radian
$C_{N\delta}$	normal force coefficient with elevator deflection, $\frac{\partial C_N}{\partial \delta}$, per radian
C_{N_q}	normal force coefficient with pitch rate, $\frac{\partial C_N}{\partial \hat{q}}$, per radian
$\bar{c}$	mean aerodynamic chord, 16.64 ft
M	Mach No., non-dimensional
$\bar{q}$	dynamic pressure, psf
S	wing area, 1951 ft^2
V	true airspeed, feet/second
W	weight of airplane, lbs
w_g	vertical gust velocity (positive up), feet/second
x	generic parameter, different units
$\bar{x}$	running mean of generic parameter over 10-seconds, different units
α	angle of attack, radians
α_g	angle of attack due to gust, radians
δ	elevator deflection, radians
$\hat{q}$	non-dimensional pitch rate, $\frac{q\bar{c}}{2V}$, non-dimensional
θ	pitch attitude, radians or degrees
γ	flight path angle, radians
η	ratio of pressure at altitude to pressure at sea level, non-dimensional
ϕ	roll attitude, degrees
ω_1, ω_2	lower and upper angular frequencies, radians/second
$\hat{\sigma}_{w_g}$	standard deviation of filtered vertical gust velocity, ft/second
ε	eddy dissipation rate, ft^2/sec^3

Operators:

Δ indicates the change relative to a 10-second running mean

Abbreviations:

PSD power spectral density

Introduction

Commercial airliners offer attractive platforms for making meteorological measurements of the atmosphere. Winds and temperatures have been transmitted from commercial airplanes for a few years now. In addition, an algorithm for estimating the turbulence level (as measured by the eddy dissipation rate) using existing airplane sensors and processors was proposed, reference 1. The algorithm was based on the airplane transfer function of normal acceleration response to vertical gusts. The normal acceleration was used because it is usually available on the airplane's data bus at a high enough data rate to define turbulence. The angle of attack, which could be used in a more straightforward algorithm using the equation described in reference 2, is usually heavily filtered to remove turbulence and is sampled at too low a data rate to define turbulence over a useful frequency band. The airplane transfer function, defined in reference 1, must be integrated off-line in the frequency domain using the assumption that the turbulence has an energy spectrum with a –(5/3) slope on a log-log plot. To be most accurate this integral of the transfer function must be stored in the algorithm as a 6-dimensional table of (1) airplane flap/landing gear configuration, (2) control system mode (3) center of gravity position, (4) weight, (5) altitude, and (6) Mach No.(or dynamic pressure).

An alternate algorithm, called the normal force in-situ turbulence algorithm, is described in this paper. This algorithm is based on the fact that the normal force coefficient is primarily dependent on the angle of attack with much smaller contributions from other parameters such as the elevator and pitch rate. The parameters defining this algorithm need to be stored as only a 4-dimensional function of (1) airplane flap/landing gear configuration, (3) weight, (3) altitude, and (4) Mach No. (or dynamic pressure). In addition to removing 2 of the 6 dimensions from the storage requirements, the normal-force algorithm has other advantages. The algorithm is theoretically more robust, provides additional useful information, and is easier to implement.

The present paper develops the equations used in the normal-force algorithm. The equations are discussed, and the algorithm is shown to be theoretically more robust, provide additional useful information, and easier to implement when compared to the transfer function algorithm. A simplified research version of the algorithm is presented. A table of the defining parameters (normal force coefficients) in the algorithm is presented for 2 dimensions (altitude and dynamic pressure) for a clean configuration of a Boeing 757 airplane at a weight of 180,000 lb instead of the normal 4 dimensions of the general algorithm. Finally, illustrative time histories and power spectral densities of the output from the simplified research algorithm during a severe turbulence encounter on the NASA Boeing 757 ARIES airplane are compared to a "truth" measurement.

Development of Equations

The change in the normal acceleration at the center of gravity from a mean flight condition is related to the corresponding change in the normal force coefficient,

$$\Delta a_n = \frac{\bar{q} S \Delta C_N}{W} \tag{1}$$

The change in normal force coefficient is assumed to be a linear function of angle of attack, elevator angle, and pitch rate:

$$\Delta C_N = C_{N_\alpha} \Delta\alpha + C_{N_\delta} \Delta\delta + C_{N_q} \Delta\hat{q} \tag{2}$$

where the aerodynamic terms, C_{N_α}, C_{N_δ}, C_{N_q}, are, in general, non-linear functions of(1) the airplane configuration, (2) weight (through the resulting trim angle of attack), (3) Mach No. (or dynamic pressure), and (4) altitude as determined in a 4-dimensional table-lookup routine. For the flight illustration in this report, the table will be simplified to a 2-dimensional function of dynamic pressure and altitude. In other words, the flight data are limited to one airplane configuration (clean) and a nominal weight of 180,000 lb.

If the angle of attack is measured directly with sufficient bandwidth, then it can be inserted directly into equation (2). However, in most cases on commercial airliners the angle of attack measurement is low-pass filtered (to removed fluctuations due to turbulence) and is not sampled at as high a rate as the normal acceleration. Therefore, the angle of attack is derived from other measurements, primarily the normal acceleration, as discussed below. The change in the total angle of attack is

$$\Delta\alpha = \Delta\theta - \Delta\gamma + \Delta\alpha_g \tag{3}$$

The measurements of the pitch angle and flight path angle are ordinarily sampled at lower data rates than the normal acceleration on most airplane data buses. Fortunately this is not a problem because the pitch angle and flight path angle are primarily a function of the short period and plunge responses of the airplane, which contain much lower frequencies than the gusts. The higher frequency gust information is contained in the normal acceleration measurement.

The gust angle of attack $\Delta\alpha_g$ is the key parameter to be calculated in the algorithm. If equation (3) is substituted into equation (2), which is in turn substituted into equation (1), the gust angle of attack can be solved for

$$\Delta\alpha_g = \left(\frac{W}{\bar{q} S C_{N_\alpha}}\right)\Delta a_n - \left(\frac{C_{N_\delta}}{C_{N_\alpha}}\right)\Delta\delta - \left(\frac{C_{N_q}}{C_{N_\alpha}}\right)\Delta\hat{q} - \Delta\theta + \Delta\gamma \tag{4}$$

The gust angle of attack can be converted to the vertical gust velocity using the small angle approximation

$$w_g = V * \Delta\alpha_g \tag{5}$$

This vertical gust velocity is relative to the airplane axis system. In a banked turn of 45 degrees, for example, w_g is tilted from the vertical by 45 degrees.

Discussion of Equations

General considerations: Equation (2) (although linear in angle of attack, elevator angle, and pitch rate) is non-linear in altitude, dynamic pressure, weight, and airplane configuration because of the 4-dimensional table-lookup function. The dimension of dynamic pressure accounts for the non-linearities due to different trim angles of attack. However, non-linearities with angle of attack about the trim angle of attack are not accounted for. For a cruise flight conditions (as illustrated with flight data later) the airspeeds are large and the trim angle of attack is small. The angle of attack induced by a given vertical gust velocity is, therefore, relatively small because it is inversely proportional to the airspeed. The total angle of attack, equal to the sum of the small trim angle and the gust angle of attack, is rarely large enough to get into the non-linear stall range of angle of attack. For example, it was estimated that it would take an upward gust of over 50 feet/second at a cruise flight condition to induce a total angle of attack that would begin to exceed the linear range of C_{N_α}. For other flight conditions and configurations such as landing approach, the linear range would be smaller. However, the transfer function technique is limited in the same way. The non-linearities with elevator angle and pitch rate are even less significant because these terms, as will be shown later, are relatively insignificant.

The equations could theoretically include terms involving stabilizer position, the rate of change of the angle of attack, and the fore and aft gust velocity. The stabilizer position term is not necessary because the stabilizer position changes so slowly that the running mean calculation described later correctly eliminates its effect. The effect of the rate of change of the angle of attack may be important for extremely rapid changes in the gust velocity, but studying these effects is beyond the scope of this study. Likewise, the fore and aft gust velocities are not studied--their effects on the normal acceleration for a cruise flight condition are ordinarily about an order of magnitude less than those for horizontal gusts, see reference 3.

The dimension of weight in the 4-dimensional table is relatively unimportant compared to the other three dimensions. The weight itself is a first-order term in the final equation, equation (4), but weight only affects the values in the table through its influence on the trim angle of attack at a given dynamic pressure and altitude. Weight has a corresponding effect on the transfer function algorithm. But for the illustrative flight data shown in this report, the flight weight was very nearly equal to the weight (180,000 lbs) for which the table values were determined.

Theoretical advantages: There are three theoretical advantages of this formulation compared to the transfer function approach. First the aerodynamic coefficients in equation (4), and consequently the algorithm, are relatively insensitive to changes in the center of gravity position. That is, normal force coefficients are practically independent of center of gravity position thus removing this dimension from the storage requirements. The transfer function relating vertical gust velocity to normal acceleration, on the other

hand, is directly dependent on the longitudinal static stability, which is, of course, directly related to the center of gravity position.

Secondly, including $\Delta\theta$ and $\Delta\gamma$ makes the algorithm independent of the mode of the control system. That is, since the algorithm contains measurements of the pitch attitude and flight path angle, all the dynamics of the airplane due to the pitch control system or pilot pitch inputs are automatically compensated for.

The third theoretical advantage is that the normal-force algorithm produces estimates of the vertical gust velocities that are independent of the energy spectrum of the turbulence. Discrete gusts such as large vortices or wind rotors are known to be frequently responsible for dangerous turbulence encounters for airliners, reference 4. The PSD plot of a vortex has a much steeper slope than the –(5/3) slope of a von Karman spectra, figure 1. Using the assumption that the slope of the PSD is –(5/3) would obviously lead to an erroneous result for discrete gusts like a vortex.

Additional Information: Another advantage of the normal-force algorithm is that it produces a time history of the vertical gust velocity in both the positive and negative directions. Negative (down) gusts are more dangerous for airplane passengers than positive gusts so the direction of the gust is valuable information. The vertical gust velocity could be used for automatic pilot reports of turbulence to produce intuitively meaningful hazard metrics. The transfer function algorithm, on the other hand, only produces the eddy dissipation rate, which is an RMS parameter with no directional information.

If desired, the vertical gust velocity, w_g, can be converted to the eddy dissipation rate. First, w_g is passed through a band-pass filter over a frequency range (ω_1 to ω_2) where the measurements are valid and the turbulence is assumed to follow a –(5/3) energy spectrum. Next, the standard deviation, $\hat{\sigma}_{w_g}$, of the filtered vertical velocity is calculated. Finally, the one-third power of the eddy dissipation rate is calculated from the integral of equation (15) in reference 1

$$\varepsilon^{\frac{1}{3}} = \frac{\hat{\sigma}_{w_g}}{\sqrt{16.6 V^{\frac{2}{3}} \int_{\omega_1}^{\omega_2} \omega^{\frac{-5}{3}} d\omega}} \tag{6}$$

where the constant, 16.6, differs from the constant, 0.7, in reference 1 because U.S. Customary Units are used here rather than SI units. Of course, this calculation is valid only if the turbulence has a –(5/3) energy spectrum, but this limitation applies to the transfer function algorithm also. However, it is impossible to convert the eddy dissipation rate derived from the transfer function technique of reference 1 to a time history of w_g. The fact that the normal-force algorithm can produce both the eddy dissipation rate(of interest to meteorologists) and a time history of the vertical gust velocity (of interest to pilots) is a distinct asset. In other words, the normal-force algorithm produces additional, useful information that the transfer function algorithm does not.

Implementation advantages: An additional advantage of the normal-force algorithm is that the defining parameters in the algorithm are easier to obtain. A simple linearization algorithm can be used on an existing simulation of a commercial airplane to produce the normal force coefficients. No complex procedures and off-line integrations are needed.

Drawbacks: A drawback of the normal-force algorithm is that, in addition to all the measured parameters required by the transfer function approach, this algorithm also requires measurements of the pitch attitude and flight path angle. If additional accuracy is desired, the elevator position and pitch rate are also required. Fortunately, all of these parameters are available on the data bus of most operational airliners.

Algorithm Implementation

The algorithm was implemented in the NASA ARIES Boeing 757 as shown in figure 2. The input parameters on the left hand side of the figure (W, V, a_n ….) came from a variety of sensors and sources on board the airplane such as the air data computer and inertial measurement unit as well as experimental sensors installed by NASA. These measurements, which had different filtering and update rates, were combined asynchronously on a common data bus and are, therefore, not representative of an operational data stream. The results that are shown herein are, therefore, only for illustrative purposes. A rigorous evaluation of the algorithm or a comparison with other algorithms such as the transfer function algorithm would require a different experimental arrangement. However, the most important measurement in equation (4) is that for the normal acceleration, a_n. This measurement was made by an experimental accelerometer installed by NASA for the turbulence flight tests. The output from this accelerometer was passed through an analog 20 Hz low-pass filter and sampled at 50 samples/second. The other dominant measurements such as the pitch attitude and flight path angle came from the airplane's standard data bus. However, they contained little information above the short period frequency of the airplane (approximately 0.3 Hz) so their internal filtering in the inertial measurement unit, although not known, was probably adequate. That is, the minimum update on the airplane data bus of the pitch attitude was 50 samples/second, while that for the flight path angle was 20 samples/second. The internal filtering in the IRU probably did not remove any of the 0.3 Hz information that was needed. However, as stated earlier, the data presented herein is preliminary and is only for illustrative purposes. A rigorous evaluation of the algorithm would require a different experimental set-up.

The parameters Δa_n, $\Delta\delta$, $\Delta\hat{q}$, $\Delta\theta$, $\Delta\gamma$ were obtained from a calculation of the form

$$\Delta x = x - \bar{x} \tag{7}$$

where $\bar{x}$ is a running mean for a period of time, e.g.10 seconds. The weight, W , was also on the data bus and was used directly. The wing area, S , was a known constant. The dynamic pressure was calculated from the Mach No. and pressure altitude which were also on the data bus.

$$\bar{q} = 1481\eta M^2 \tag{8}$$

where

for h_p up to 36,089ft

$\eta = (1 - A1 * h_p)^{5.2561}$

A1 = 6.87535x10^{-6}

M = Mach No.

h_p =pressure altitude in ft

and for h_p >36089 ft

$\eta = .22336 \exp(-A2 * (h_p - 36089))$

A2 = 4.80634x10^{-5}

The aerodynamic parameters, C_{N_α} , C_{N_δ} , C_{N_q} , were interpolated from a two-dimensional table (independent parameters: pressure altitude, h_p and dynamic pressure, $\bar{q}$.) derived from the NASA Langley Boeing 757 simulation, Table 1. The derivation was accomplished using a routine that linearized the non-linear simulation about a given, 1-g, trimmed flight condition. For this preliminary study the other two dimensions (airplane configuration and airplane weight) of the general 4-dimensional table were eliminated by restricting the flight test to a clean configuration and a nominal weight.

Flight Data

The algorithm was flown on several flights of the ARIES airplane. Some of these flights deliberately flew into areas of potential turbulence as part of the Weather Accident Prevention element of NASA's Aviation Safety Program. One particularly turbulent run is shown in figure 3. The airplane was initially flying in relatively clear and calm air near some convective activity at an altitude of 33,000 ft and a Mach No. of approximately 0.78. At about 30 seconds into the time history the airplane started to encounter some moderate turbulence as evidenced by the normal acceleration trace, a_n . The moderate turbulence continued until about 100 seconds into the time history and then slowly decreased in intensity. The pilot began to turn the airplane at about 140 seconds, first to the left, then to the right, and then back to the left. At about 190 seconds into the time history, the turbulence rapidly increased until at about 201 seconds there was a severe spike in the normal acceleration to about –0.34 g's. The negative sign on the acceleration

indicates that unsecured items in the airplane would fly upward toward the ceiling. Negative accelerations like this cause unbuckled passengers and flight attendants to fly up into the ceiling, and then when the acceleration returns to a positive value, they fall back down to the floor in an awkward position and sustain their most serious injuries.

The corresponding output for the normal-force in-situ algorithm is shown in figures 4 and 5. The "truth" measurement was derived from an experimental high-bandwidth angle of attack measurement and other standard inertial measurements using a technique similar to those described in references 5-7. These measurements suffered from the same deficiencies due to the (sometimes common) measurements used in the normal-force algorithm and described earlier. The accuracy of this truth measurement was determined to be approximately 3 feet/second using maneuvers in still air as described in reference 5. However, no completely independent verification of this estimated accuracy was possible as is usually the case for any airborne measurements of turbulence.

The in-situ vertical wind estimate appears to be well within the estimated accuracy of the "truth" measurement for most of the run. However, there are larger instantaneous differences especially after 200 seconds in the time history. It is thought that these differences are due to maneuvering of the airplane that caused normal accelerations independent of the gusts. The effects of the maneuvering accelerations were reduced, but not entirely eliminated, by subtracting the running mean as shown in equation (7). The length of time over which the running meaning was calculated was fixed at 10 seconds for this study. For this preliminary study, other lengths of time that may have been more effective were not explored. Another alternative for allowing for maneuvers is to simply turn off the algorithm when the bank angle or control inputs exceed certain levels. The portions of the flight where this would be required are probably short enough compared to the entire flight that the overall usefulness of the algorithm would not be severely impacted.

In the time domain the standard deviation of the estimated gust velocity is within about 1.1% of the "truth" number. The mean of the estimated gust velocity is practically zero while the mean for the "truth" is 1.10 feet/second. The mean for the "truth" could be erroneous because of slight biases in either the angle of attack or pitch attitude, reference 7. The running mean calculation in the normal-force algorithm effectively removes any such biases, but also eliminates the possibility of detecting steady updrafts or downdrafts. The peak-to-peak value (independent of such biases) for the algorithm is 110.9 feet/second, which compares very well with 109.3 feet/second for the "truth" measurement (1.5% difference).

In the frequency domain, the estimated gust velocity is very nearly equal to the "truth" estimate up to about 2 Hz where the structural responses of the airplane begin to contaminate the results. It appears that both the normal-force estimate and the "truth" estimate are contaminated between 1 and 2 Hz because their lines depart from the –(5/3) slope in that region.

The relative contributions of the elevator and pitch rate terms are illustrated in figure 6. The data demonstrate that, at least for this particular run, the elevator and pitch terms in equations (2) and (4) are relatively insignificant.

Concluding Remarks

A normal-force in-situ turbulence algorithm for commercial airplanes has been described. The algorithm uses normal acceleration and other parameters available on the data bus of most commercial airplanes and estimates the vertical gust velocity. The requisite aerodynamic parameters are easily obtained from existing simulators. The estimated vertical gust velocity could be used for automatic pilot reports of turbulence to produce intuitively meaningful hazard metrics for pilots. A relatively simple calculation can transform the vertical gust velocities into the eddy dissipation rate for use by meteorologists. The equations used in the algorithm were discussed, and the algorithm was shown to be theoretically more robust, provide additional useful information, and easier to implement as compared to a transfer function algorithm. Although the algorithm includes some natural maneuver rejection capability, it was suggested that the algorithm could be turned off during maneuvers without severely impacting the algorithm's usefulness.

A simplified version of the algorithm has been flown on NASA's Boeing 757 ARIES research airplane with a research data system rather than an operational commercial airliner data system. The algorithm produced estimates of the vertical gust velocity that were in good agreement with a "truth" measurement. The statistical measures of the turbulence were within 1 to 2% of the truth measurement. However, more tests using only measurements available on an operational commercial airliner data bus are required for a definitive evaluation of the algorithm or a comparison with other algorithms.

References

1. Cornman, Larry B., Morse, Corinne S., and Cunning, Gary. "Real-Time Estimation of Atmospheric Turbulence Severity from In-Situ Aircraft Measurements. Journal of Aircraft, Volume 32, No. 1, January-February, 1995
2. Houbolt, J.C., Steiner, R., and Pratt, K.G., "Dynamic Response of Airplanes to Atmospheric Turbulence Including Flight Data on Input and Response," NASA TR-199, June 1964.
3. Phillips, William H.: "Study of a Control System to Alleviate Aircraft Response to Horizontal and Vertical Gusts," NASA TND-7278, December 1973.
4. Parks, E.K., Wingrove, R.C., Bach, R.E., and Mehta, R.S. "Identification of Vortex-Induced Clear Air Turbulence Using Airline Flight Records." Journal of Aircraft, Vol. 22, No. 2, February, 1985.
5. Barrick, John D. W., et al "Calibration of NASA turbulent air motion measurement system." NASA TP 3610, 1996.
6. Vicroy, Dan D., et al "Flight Data Reduction of Wake Vortex Measurements using an Instrumented OV-10 airplane." NASA TM 1999-209552, 1999.
7. Lenschow, Donald,H. "Aircraft Measurements in the Boundary Layer." In "Probing the Atmospheric Boundary Layer," American Meteorological Society, 1986.

Table 1—Aerodynamic parameters

h_p	$\bar{q}$, psf C_{N_α}				
0 kft	86.754	135.11	211.66	305.33	414.54
	5.005476	5.67618	5.461159	5.402712	5.429761
10 kft	86.283	134.26	208.17	298.22	403.13
	5.071273	5.662014	5.401875	5.600237	5.728716
20 kft	85.377	131.9	203.85	288.73	387.33
	5.23456	5.653277	5.668183	5.946638	6.438153
30 kft	94.487	129	196.68	275.78	318.45
	5.209306	5.71318	5.51685	6.963562	6.834061
40 kft	113.07	136	160.63	186.39	
	4.847166	6.008908	7.437156	7.433663	

h_p	$\bar{q}$, psf C_{N_q}				
0 kft	86.754	135.11	211.66	305.33	414.54
	8.517083	7.813975	7.482567	3.699813	3.629151
10 kft	86.283	134.26	208.17	298.22	403.13
	8.515593	7.795346	4.029572	3.866358	3.92014
20 kft	85.377	131.9	203.85	288.73	387.33
	8.536046	7.789162	4.260381	4.24293	4.615157
30 kft	94.487	129	196.68	275.78	318.45
	4.394943	4.530174	7.601191	5.548585	6.749557
40 kft	113.07	136	160.63	186.39	
	5.213272	4.8173	5.704343	6.928187	

Table 1—concluded.

h_p	$\bar{q}$, psf C_{N_δ}				
0 kft	86.754	135.11	211.66	305.33	414.54
	0.543531	0.529575	0.480435	0.43812	0.380125
10 kft	86.283	134.26	208.17	298.22	403.13
	0.542317	0.528598	0.49035	0.441767	0.382898
20 kft	85.377	131.9	203.85	288.73	387.33
	0.54091	0.529504	0.498675	0.452234	0.407177
30 kft	94.487	129	196.68	275.78	318.45
	0.512749	0.540988	0.354756	0.499779	0.466161
40 kft	113.07	136	160.63	186.39	
	0.535557	0.567996	0.58422	0.584043	

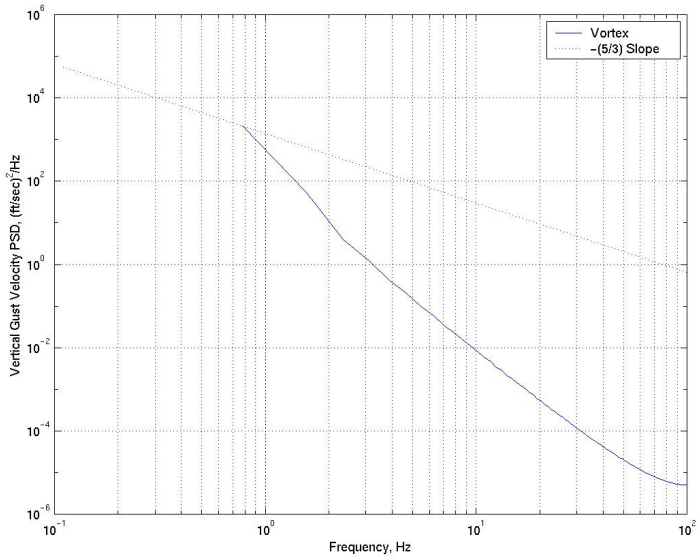

Figure 1. PSD of the vertical gust velocity from a simulated flight at a true airspeed of 800 ft/sec passing through the center of a vortex with a diameter of 1000 ft and maximum tangential velocity of 50 ft/s.

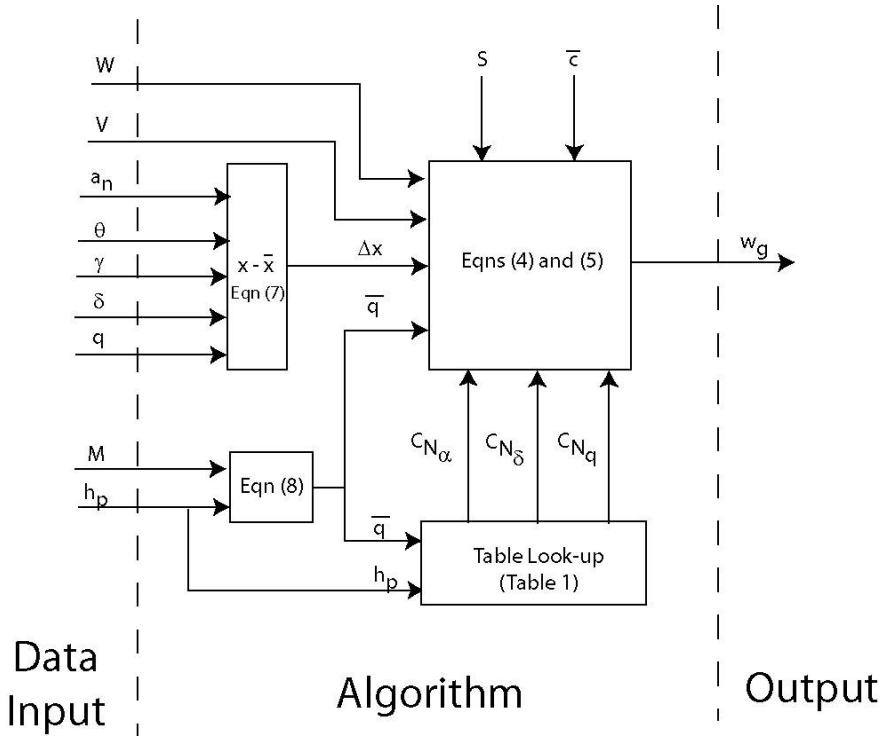

Figure2. Block diagram of algorithm.

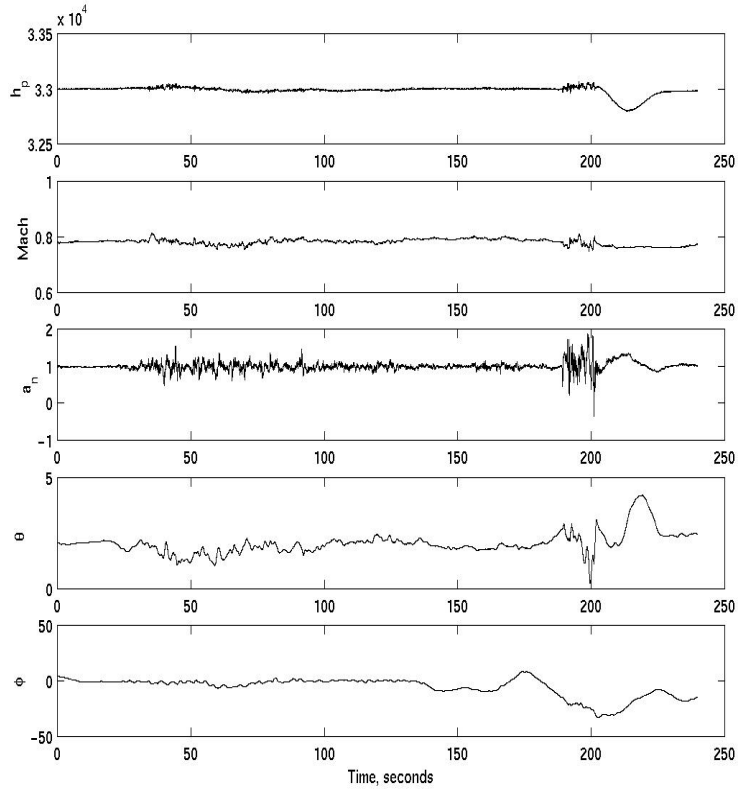

Figure 3. Time histories for turbulence encounter.

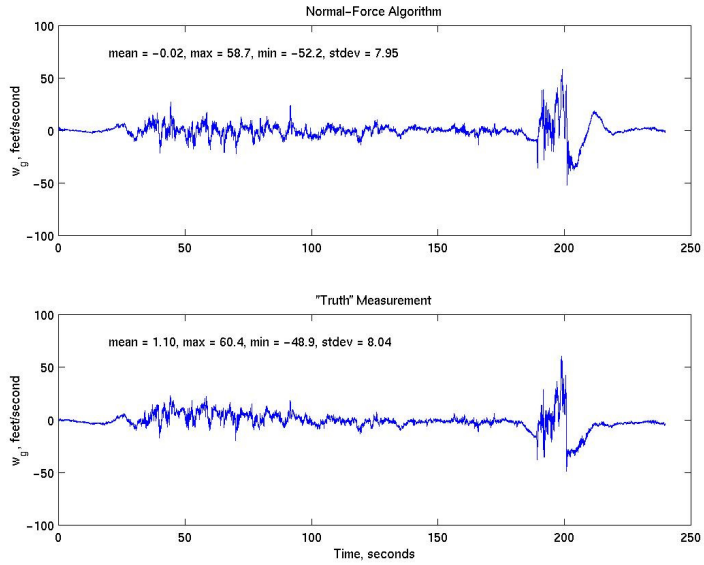

Figure 4. Time domain comparison of estimated vertical winds from the normal force in-situ algorithm with "truth" measurement.

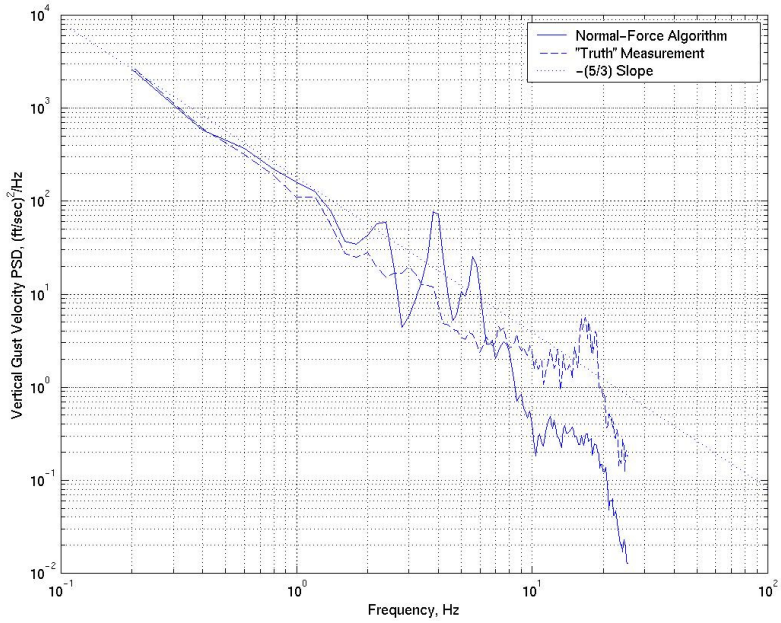

Figure 5. Frequency domain comparison of estimated vertical winds for the normal-force in-situ algorithm and the "truth" measurement.

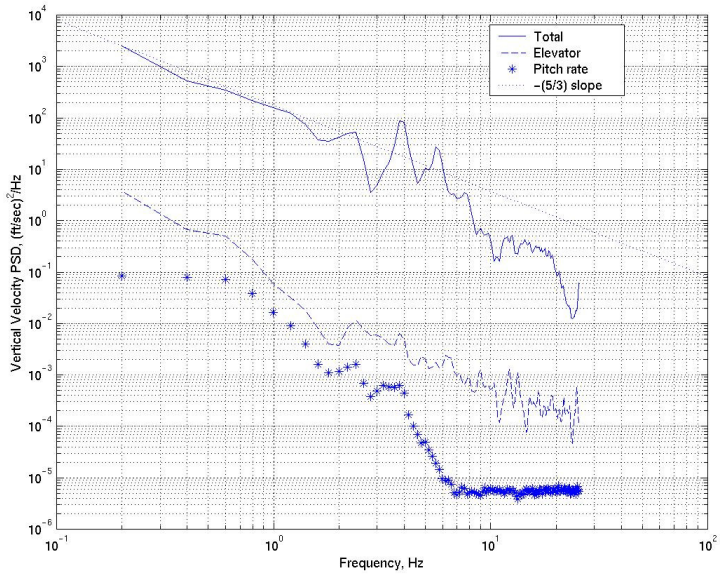

Figure 6. Comparison of total algorithm output to components from the elevator and pitch rate.

REPORT DOCUMENTATION PAGE

Form Approved
OMB No. 0704-0188

1. REPORT DATE *(DD-MM-YYYY)*
01- 12 - 2003

2. REPORT TYPE
Technical Memorandum

3. DATES COVERED *(From - To)*

4. TITLE AND SUBTITLE
Description of a Normal-Force In-Situ Turbulence Algorithm for Airplanes

5a. CONTRACT NUMBER

5b. GRANT NUMBER

5c. PROGRAM ELEMENT NUMBER

6. AUTHOR(S)
Stewart, Eric C.

5d. PROJECT NUMBER

5e. TASK NUMBER

5f. WORK UNIT NUMBER
23-728-40-30

7. PERFORMING ORGANIZATION NAME(S) AND ADDRESS(ES)
NASA Langley Research Center
Hampton, VA 23681-2199

8. PERFORMING ORGANIZATION REPORT NUMBER
L-18274

9. SPONSORING/MONITORING AGENCY NAME(S) AND ADDRESS(ES)
National Aeronautics and Space Administration
Washington, DC 20546-0001

10. SPONSOR/MONITOR'S ACRONYM(S)
NASA

11. SPONSOR/MONITOR'S REPORT NUMBER(S)
NASA/TM-2003-212666

12. DISTRIBUTION/AVAILABILITY STATEMENT
Unclassified - Unlimited
Subject Category 03
Availability: NASA CASI (301) 621-0390 Distribution: Nonstandard

13. SUPPLEMENTARY NOTES
An electronic version can be found at http://techreports.larc.nasa.gov/ltrs/ or http://ntrs.nasa.gov

14. ABSTRACT

A normal-force in-situ turbulence algorithm for potential use on commercial airliners is described. The algorithm can produce information that can be used to predict hazardous accelerations of airplanes or to aid meteorologists in forecasting weather patterns. The algorithm uses normal acceleration and other measures of the airplane state to produce a robust time history of the vertical gust velocity that would be intuitively useful to pilots. With proper processing, the time history can be transformed into the eddy dissipation rate that would be useful to meteorologists. Flight data for a simplified research implementation of the algorithm indicate that the algorithm has potential for producing accurate in-situ turbulence measurements.

15. SUBJECT TERMS
Atmospheric turbulence; In-situ aircraft measurements; Atmospheric turbulence measurements; Atmospheric turbulence hazards; Aircraft hazards

16. SECURITY CLASSIFICATION OF:			17. LIMITATION OF ABSTRACT	18. NUMBER OF PAGES	19a. NAME OF RESPONSIBLE PERSON
a. REPORT	b. ABSTRACT	c. THIS PAGE			STI Help Desk (email: help@sti.nasa.gov)
U	U	U	UU	21	19b. TELEPHONE NUMBER *(Include area code)* (301) 621-0390