NASA TECHNICAL NOTE

NASA TN D-3010

NASA TN D-3010

ON FREE VIBRATIONS OF ECCENTRICALLY STIFFENED CYLINDRICAL SHELLS AND FLAT PLATES

by Martin M. Mikulas, Jr., and John A. McElman

Langley Research Center
Langley Station, Hampton, Va.

NATIONAL AERONAUTICS AND SPACE ADMINISTRATION • WASHINGTON, D. C. • SEPTEMBER 1965

ON FREE VIBRATIONS OF ECCENTRICALLY STIFFENED CYLINDRICAL SHELLS AND FLAT PLATES

By Martin M. Mikulas, Jr., and John A. McElman
Langley Research Center

SUMMARY

Dynamic equilibrium equations and boundary conditions are derived from energy principles for eccentrically stiffened cylinders and flat plates. Inplane inertias are neglected and frequency expressions are obtained for simple-support boundary conditions for both the cylinder and the plate. Results in the form of plots of frequencies as a function of mode shape illustrate the effects of eccentricities. It is found that these eccentricities can have a significant effect on natural frequencies and should be investigated in any dynamic analysis of stiffened structural members.

INTRODUCTION

The effects of stiffener eccentricities on the buckling characteristics of stiffened circular cylindrical shells are being given a great deal of consideration in the design of aerospace structures. In references 1 to 5, the effects of eccentricities on the buckling of stiffened cylinders have been treated analytically. An externally stiffened cylinder under axial compression has been shown experimentally to carry over twice the load sustained by its internally stiffened counterpart (ref. 6).

It should be expected, therefore, that substantial eccentricity effects would be found in the vibration characteristics of stiffened cylinders. A survey of the present literature (for example, refs. 7 and 8) reveals that stiffener eccentricity generally has been neglected in studying the vibrations of stiffened cylinders.

In the present paper, the differential equations of dynamic equilibrium are derived from energy considerations for the free vibrations of ring- and stringer-stiffened cylinders. The derivation is accomplished by utilizing Donnell-type strain-displacement relations for the cylinder and beam-type strain-displacement relations for the stiffeners. The stiffeners are not considered as discrete elements, but their effects are averaged or "smeared out." However, the location of the resulting equivalent orthotropic layers relative to the shell middle surface is carefully maintained; that is, the common assumption that the equivalent orthotropic shell is homogeneous through the

thickness with a single neutral surface is not made. Inplane inertias are neglected and the differential equations of dynamic equilibrium and appropriate boundary conditions are found by variational techniques. The differential equations are solved to obtain a closed-form frequency expression for ring- and stringer-stiffened cylinders for the case of simple-support boundary conditions. Results from this expression are presented in the form of plots of natural frequencies as a function of mode shape for several practical configurations. These plots illustrate the effects of stiffener eccentricity.

A comparable analysis for the free vibrations of stiffened flat plates is presented and again it is shown that eccentricity effects can be important.

SYMBOLS

The units used for the physical quantities defined in this report are given both in the U.S. Customary Units and in the International System of Units, SI (ref. 9). The appendix presents factors relating these two systems of units.

A cross-sectional area of stiffener

C defined by equation (47)

D flexural stiffness of isotropic plate or isotropic cylinder wall, $\frac{Et^3}{12\left(1 - \mu^2\right)}$

E Young's modulus

G shear modulus

I moment of inertia of stiffener about its centroid

I_o moment of inertia of stiffener about middle surface of plate or cylinder

J torsional constant for stiffener

M mass per unit area of cylinder or plate

M_x, M_y, M_{xy}, M_{yx} moment resultants

N number of stringers

N_x, N_y, N_{xy} stress resultants

R radius to middle surface of isotropic cylinder (see sketch a)

$\bar{R}$	nondimensional parameter, $\frac{E_r A_r}{Et\ell}$
$\bar{S}$	nondimensional parameter, $\frac{E_s A_s}{Etd}$
Z	curvature parameter, $\frac{a^2}{Rt}\left(1 - \mu^2\right)^{1/2}$
a	length of cylindrical shell or plate
b	width of plate
d	stringer spacing (see sketch a)
f	frequency, $\frac{\omega}{2\pi}$
ℓ	ring spacing (see sketch a)
m,n	integers
t	thickness of cylinder or plate
u,v,w	displacements in x-, y-, and z-directions, respectively
$\bar{u},\bar{v},\bar{w}$	displacement amplitudes
x,y,z	orthogonal coordinates defined in sketch a (x and y lie in middle surface of cylinder or plate)
$\bar{z}$	distance from middle surface of plate or cylinder to centroid of stiffener
α,β	wavelength parameters
$\epsilon_x,\epsilon_y,\gamma_{xy}$	middle-surface normal and shearing strains
$\epsilon_{xT},\epsilon_{yT},\gamma_{xyT}$	total normal and shearing strains (see eqs. (2) to (4))
Λ	defined by equations (44a), (44b), (44c), and (44d)
μ	Poisson's ratio
Π	potential energy
ρ	mass density
ω	circular frequency

$\nabla^4 = \nabla^2\nabla^2$ where ∇^2 is the Laplacian operator in two dimensions

Subscripts:

c	cylinder
r	stiffening in y-direction
s	stiffening in x-direction
p	plate
ω	inertial load

A subscript preceded by a comma indicates partial differentiation with respect to the subscript.

DERIVATION OF BASIC EQUATIONS

The problem considered is the free vibration of a thin-walled circular cylindrical shell which is stiffened by evenly spaced uniform rings and/or stringers. (See sketch a.) Inplane inertias are neglected, and it is assumed that the stiffener spacing is small compared with the vibration wavelength so that its effect on the behavior of the cylinder may be averaged (smeared out). The strain energies of the cylinder and stiffeners are presented and the displacements of the stiffeners and the cylinder are required to be compatible. After formulating the potential energy of inertial loading, the equations of dynamic equilibrium and consistent boundary conditions are obtained by applying the method of minimum potential energy to the total energy of the system. The differential equations of dynamic equilibrium and consistent boundary conditions are then obtained in a similar fashion for a stiffened flat plate.

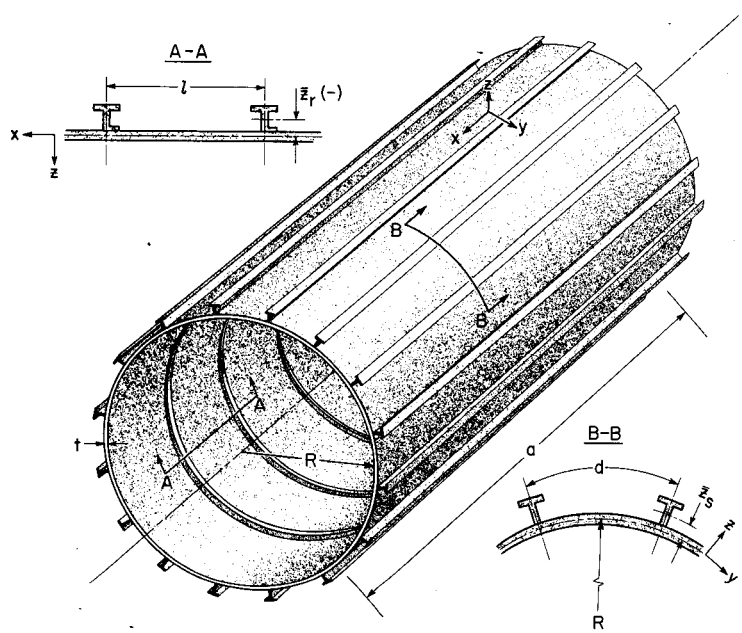

Sketch a.- Geometry of eccentrically stiffened cylinder.

Strain Energy of Isotropic Cylinder

The strain energy of the unstiffened thin-walled isotropic cylinder is

$$\Pi_c = \frac{E}{2\left(1 - \mu^2\right)} \int_{-t/2}^{t/2} \int_0^{2\pi R} \int_0^a \left(\epsilon_{xT}^2 + \epsilon_{yT}^2 + 2\mu\epsilon_{xT}\epsilon_{yT} + \frac{1 - \mu}{2} \gamma_{xyT}^2\right) dx\ dy\ dz \quad (1)$$

The linear Donnell-type strain-displacement relations are

$$\epsilon_{xT} = \epsilon_x - zw,_{xx} \quad (2)$$

$$\epsilon_{yT} = \epsilon_y - zw,_{yy} \quad (3)$$

$$\gamma_{xyT} = \gamma_{xy} - 2zw,_{xy} \quad (4)$$

where the middle-surface strains are defined as

$$\epsilon_x = u,_x$$

$$\epsilon_y = v,_y + \frac{w}{R}$$

$$\gamma_{xy} = u,_y + v,_x$$

Substitution of equations (2), (3), and (4) into equation (1) and integration with respect to z yields the following expression for cylinder strain energy:

$$\Pi_c = \frac{Et}{2\left(1 - \mu^2\right)} \int_0^{2\pi R} \int_0^a \left[u,_x^2 + \left(v,_y + \frac{w}{R}\right)^2 + 2\mu u,_x\left(v,_y + \frac{w}{R}\right)\right.$$

$$\left. + \frac{1 - \mu}{2}\left(u,_y + v,_x\right)^2\right] dx\ dy + \frac{D}{2} \int_0^{2\pi R} \int_0^a \left[w,_{xx}^2 + w,_{yy}^2\right.$$

$$\left. + 2\mu w,_{xx}w,_{yy} + 2(1 - \mu)w,_{xy}^2\right] dx\ dy \quad (5)$$

In this equation, $D = \dfrac{Et^3}{12\left(1 - \mu^2\right)}$ is the flexural stiffness of the cylinder.

Strain Energy of Stiffeners

The strain energy of the stiffeners is derived on the basis that the displacements in the cylinder and stiffeners are equal at the point of attachment and stiffener twisting is accounted for in an approximate manner. In cases where both rings and stringers are attached to the same surface of the shell, the effect of joints in the stiffener framework is ignored.

Stringer energy.- The total strain energy of N stringers on the cylinder is written as

$$\Pi_s = \sum_{j=1}^{N}\left(\int_0^a \int_{A_s} \frac{E_s}{2}\,\epsilon_{xT}^2\,dA_s\,dx + \frac{G_sJ_s}{2}\int_0^a w,_{xy}^2\,dx\right)_j \tag{6}$$

where the first term inside the parentheses of equation (6) is the strain energy of bending and extension in the stringer, and the second term is the strain energy involved in twisting of the stringers. The quantity dA_s is an element of the cross-sectional area of the stringer and G_sJ_s is the twisting stiffness of the stringer section. After substitution from equation (2), the first term inside the parentheses of equation (6) can be written as follows:

$$\int_0^a \frac{E_s}{2}\left(u,_x^2 \int_{A_s} dA_s - 2u,_x w,_{xx} \int_{A_s} z\,dA_s + w,_{xx}^2 \int_{A_s} z^2 dA_s\right)dx$$

Inspection of these terms reveals that the first integral inside the parentheses is the area of the stringer cross section A_s, the second integral is the first moment of the area $\left(\bar{z}_sA_s\right)$ where $\bar{z}_s$ is the distance from the middle surface of the isotropic shell $(z = 0)$ to the centroid of the stringer cross section, and the third integral is the moment of inertia of the stringer $\left(I_{os}\right)$ about $z = 0$. Note that the centroidal distance $\bar{z}_s$ is positive for stringers on the outer surface of the cylinder and negative for internal stringers. If the stringer spacing d is sufficiently small, the effect of the stringers can be averaged or smeared out, and an integral may be written instead of the finite sum. Equation (6), the total strain energy of the stringers, is now written as

$$\Pi_s = \frac{1}{d}\int_0^{2\pi R}\int_0^a\left[\frac{E_s}{2}\left(A_su,_x^2 - 2\bar{z}_sA_su,_xw,_{xx} + I_{os}w,_{xx}^2\right) + \frac{G_sJ_s}{2}\,w,_{xy}^2\right]dx\,dy \tag{7}$$

Ring energy.- By utilizing an approach similar to that used for stringers, the total strain energy of the rings is found as

$$\Pi_r = \frac{1}{l} \int_0^{2\pi R} \int_0^a \left\{ \frac{E_r}{2} \left[A_r \left(v_{,y} + \frac{w}{R} \right)^2 - 2\bar{z}_r A_r \left(v_{,y} + \frac{w}{R} \right) w_{,yy} + I_{or} w_{,yy}^2 \right] + \frac{G_r J_r}{2} w_{,xy}^2 \right\} dx\, dy \tag{8}$$

where l is the ring spacing, A_r is the area of the ring cross section, $\bar{z}_r$ is the distance from the middle surface of the isotropic shell ($z = 0$) to the centroid of the ring, I_{or} is the moment of inertia of the ring cross section about $z = 0$, and $G_r J_r$ is the twisting stiffness of the ring.

Potential Energy of Inertial Loading

If the stiffened cylinder is undergoing simple harmonic motion of circular frequency ω (inplane inertias neglected), and $w(x,y)$ is the deflection shape at the time of maximum deflection, the potential energy due to inertia load is written as in reference 10 as

$$\Pi_\omega = -\frac{1}{2} \int_0^{2\pi R} \int_0^a M\omega^2 w^2 dx\, dy \tag{9}$$

where $M = \rho_c t + \rho_s \frac{A_s}{d} + \rho_r \frac{A_r}{l}$ is the averaged smeared-out mass per unit area of the stiffened cylinder. The quantities ρ_c, ρ_s, and ρ_r are the mass densities of the cylinder, stringers, and rings, respectively.

Equilibrium Equations and Boundary Conditions for Stiffened Cylinders

The total potential energy Π of the system is the sum of the energies given by equations (5), (7), (8), and (9).

$$\Pi = \Pi_c + \Pi_s + \Pi_r + \Pi_\omega \tag{10}$$

The method of minimum potential energy ($\delta\Pi = 0$) may now be applied to equation (10). By allowing the variation of the three displacements δu, δv, and δw to be arbitrary and by utilizing the fundamental lemma of the calculus of variations, the three differential equations of dynamic equilibrium for the stiffened cylinder are found to be

$$\left[1 + \frac{E_s A_s\left(1 - \mu^2\right)}{Etd}\right] u_{,xx} + \frac{1 - \mu}{2} u_{,yy} + \frac{1 + \mu}{2} v_{,xy} + \frac{\mu}{R} w_{,x}$$

$$- \frac{\bar{z}_s E_s A_s\left(1 - \mu^2\right)}{Etd} w_{,xxx} = 0 \tag{11}$$

$$\left[1 + \frac{E_r A_r\left(1 - \mu^2\right)}{Et\ell}\right] v_{,yy} + \frac{1 - \mu}{2} v_{,xx} + \frac{1 + \mu}{2} u_{,xy} + \left[1 + \frac{E_r A_r\left(1 - \mu^2\right)}{Et\ell}\right] \frac{w_{,y}}{R}$$

$$- \frac{\bar{z}_r E_r A_r\left(1 - \mu^2\right)}{Et\ell} w_{,yyy} = 0 \tag{12}$$

$$D\nabla^4 w + \frac{Et}{R\left(1 - \mu^2\right)}\left(v_{,y} + \frac{w}{R} + \mu u_{,x}\right) - \frac{\bar{z}_s E_s A_s}{d} u_{,xxx} + \frac{E_s\left(I_s + \bar{z}_s^2 A_s\right)}{d} w_{,xxxx}$$

$$+ \frac{E_r A_r}{R^2 \ell} w + \frac{E_r\left(I_r + \bar{z}_r^2 A_r\right)}{\ell} w_{,yyyy} + \frac{E_r A_r}{R\ell} v_{,y} - \frac{\bar{z}_r E_r A_r}{\ell} v_{,yyy}$$

$$- \frac{2\bar{z}_r E_r A_r}{R\ell} w_{,yy} + \left(\frac{G_s J_s}{d} + \frac{G_r J_r}{\ell}\right) w_{,xxyy} - M\omega^2 w = 0 \tag{13}$$

Note that in equation (13), the moments of inertia of the stiffeners have been transferred by the following relations:

$$I_{os} = I_s + \bar{z}_s^2 A_s$$

$$I_{or} = I_r + \bar{z}_r^2 A_r$$

where I_s and I_r are the moments of inertia of the stringers and rings, respectively, about their centroidal axes.

In addition to the equilibrium equations, the method of minimum potential energy yields the appropriate boundary conditions. The homogeneous boundary conditions to be prescribed at each end of the cylinder are obtained from the energy variation ($\delta\Pi = 0$) as follows:

$$D\left(w_{,xxx} + \mu w_{,yyx}\right) + \frac{E_s\left(I_s + \bar{z}_s^2 A_s\right)}{d} w_{,xxx} - \frac{\bar{z}_s E_s A_s}{d} u_{,xx}$$

$$+ \left(\frac{Gt^3}{3} + \frac{G_s J_s}{d} + \frac{G_r J_r}{l}\right) w_{,xyy} = 0 \tag{14a}$$

$$\text{or} \quad w = 0 \tag{14b}$$

$$D\left(w_{,xx} + \mu w_{,yy}\right) + \frac{E_s\left(I_s + \bar{z}_s^2 A_s\right)}{d} w_{,xx} - \frac{\bar{z}_s E_s A_s}{d} u_{,x} = 0 \tag{15a}$$

$$\text{or} \quad w_{,x} = 0 \tag{15b}$$

$$\frac{Et}{1 - \mu^2}\left[u_{,x} + \mu\left(v_{,y} + \frac{w}{R}\right)\right] + \frac{E_s A_s}{d} u_{,x} - \frac{\bar{z}_s E_s A_s}{d} w_{,xx} = 0 \tag{16a}$$

$$\text{or} \quad u = 0 \tag{16b}$$

$$Gt\left(u_{,y} + v_{,x}\right) = 0 \tag{17a}$$

$$\text{or} \quad v = 0 \tag{17b}$$

The natural boundary conditions are given by equations (14a), (15a), (16a), and (17a), and the geometric boundary conditions are given in equations (14b), (15b), (16b), and (17b). The condition in equation (14a) requires that a quantity comparable to the Kirchhoff shear is prescribed and hence is a free-edge boundary condition. The three natural boundary conditions in equations (15a), (16a), and (17a) correspond to conditions in which the edge moment resultant, the normal stress resultant, and the shearing stress resultant, respectively, are prescribed.

As a matter of interest the equilibrium equations (eqs. (11) to (13)) and the boundary conditions (eqs. (14) to (17)) may also be written in terms of stress and moment resultants. In this form the equilibrium equations become

$$N_{x,x} + N_{xy,y} = 0 \tag{18}$$

$$N_{y,y} + N_{xy,x} = 0 \tag{19}$$

$$-M_{x,xx} - M_{xy,xy} + M_{yx,xy} - M_{y,yy} + \frac{N_y}{R} - M\omega^2 w = 0 \tag{20}$$

and the boundary conditions which must be prescribed at each end of the cylinder become

$$M_{x,x} - \left(M_{xy,y} - M_{yx,y}\right) = 0 \tag{21a}$$

$$\text{or} \quad w = 0 \tag{21b}$$

$$M_x = 0 \tag{22a}$$

$$\text{or} \quad w_{,x} = 0 \tag{22b}$$

$$N_x = 0 \tag{23a}$$

$$\text{or} \quad u = 0 \tag{23b}$$

$$N_{xy} = 0 \tag{24a}$$

$$\text{or} \quad v = 0 \tag{24b}$$

where

$$\left.\begin{aligned}
M_x &= -\left[D\left(w_{,xx} + \mu w_{,yy}\right) + \frac{E_s\left(I_s + \bar{z}_s^2 A_s\right)}{d} w_{,xx} - \frac{\bar{z}_s E_s A_s}{d} u_{,x}\right] \\
M_y &= -\left[D\left(w_{,yy} + \mu w_{,xx}\right) + \frac{E_r\left(I_r + \bar{z}_r^2 A_r\right)}{l} w_{,yy} - \frac{\bar{z}_r E_r A_r}{l}\left(v_{,y} + \frac{w}{R}\right)\right] \\
M_{xy} &= \left(\frac{Gt^3}{6} + \frac{G_s J_s}{d}\right) w_{,xy} \\
M_{yx} &= -\left(\frac{Gt^3}{6} + \frac{G_r J_r}{l}\right) w_{,xy}
\end{aligned}\right\} \tag{25}$$

$$N_x = \frac{Et}{1 - \mu^2}\left[u_{,x} + \mu\left(v_{,y} + \frac{w}{R}\right)\right] + \frac{E_s A_s}{d} u_{,x} - \frac{\bar{z}_s E_s A_s}{d} w_{,xx} \tag{26}$$

(Equations continued on next page)

$$\left.\begin{aligned} N_y &= \frac{Et}{1 - \mu^2}\left(v_{,y} + \frac{w}{R} + \mu u_{,x}\right) + \frac{E_r A_r}{l}\left(v_{,y} + \frac{w}{R}\right) - \frac{\bar{z}_r E_r A_r}{l} w_{,yy} \\ N_{xy} &= Gt\left(u_{,y} + v_{,x}\right) \end{aligned}\right\} \tag{26}$$

Equilibrium Equations and Boundary Conditions for Stiffened Flat Plates

Dynamic equilibrium equations and appropriate boundary conditions can be derived by following the procedure already outlined for stiffened cylinders. For an isotropic plate, the middle-surface strain-displacement relations employed for the cylinder are replaced by

$$\left.\begin{aligned} \epsilon_x &= u_{,x} \\ \epsilon_y &= v_{,y} \\ \gamma_{xy} &= u_{,y} + v_{,x} \end{aligned}\right\} \tag{27}$$

If the same procedure is followed, equilibrium equations identical to equations (11), (12), and (13) with R taken to be infinitely large are obtained as follows:

$$\left[1 + \frac{E_s A_s\left(1 - \mu^2\right)}{Etd}\right] u_{,xx} + \frac{1 - \mu}{2} u_{,yy} + \frac{1 + \mu}{2} v_{,xy} - \frac{\bar{z}_s E_s A_s\left(1 - \mu^2\right)}{Etd} w_{,xxx} = 0 \tag{28}$$

$$\left[1 + \frac{E_r A_r\left(1 - \mu^2\right)}{Etl}\right] v_{,yy} + \frac{1 - \mu}{2} v_{,xx} + \frac{1 + \mu}{2} u_{,xy} - \frac{\bar{z}_r E_r A_r\left(1 - \mu^2\right)}{Etl} w_{,yyy} = 0 \tag{29}$$

$$\begin{aligned} D\nabla^4 w &- \frac{\bar{z}_s E_s A_s}{d} u_{,xxx} + \frac{E_s\left(I_s + \bar{z}_s^2 A_s\right)}{d} w_{,xxx} + \frac{E_r\left(I_r + \bar{z}_r^2 A_r\right)}{l} w_{,yyyy} \\ &+ \left(\frac{G_s J_s}{d} + \frac{G_r J_r}{l}\right) w_{,xxyy} - \frac{\bar{z}_r E_r A_r}{l} v_{,yyy} - M\omega^2 w = 0 \end{aligned} \tag{30}$$

where $M = \left(\rho_p t + \rho_s \frac{A_s}{d} + \rho_r \frac{A_r}{l}\right)$. The subscript s refers to the stiffeners in the x-direction and the subscript r refers to the cross stiffeners in the y-direction. Note that, unlike classical linear flat-plate theory, equation (30) is coupled with equations (28) and (29) as a result of one-sided stiffening on the plate. It can be seen, however, that for symmetrical stiffening $\left(\bar{z}_s = \bar{z}_r = 0\right)$ equation (30) becomes uncoupled from equations (28) and (29).

The appropriate homogeneous boundary conditions obtained from the variational procedure are as follows:

For edges parallel to the y-axis

$$D\left(w_{,xxx} + \mu w_{,yyx}\right) + \frac{E_s\left(I_s + \bar{z}_s^2 A_s\right)}{d} w_{,xxx} - \frac{\bar{z}_s E_s A_s}{d} u_{,xx}$$

$$+ \left(\frac{Gt^3}{3} + \frac{G_s J_s}{d} + \frac{G_r J_r}{l}\right) w_{,xyy} = 0 \tag{31a}$$

$$\text{or} \quad w = 0 \tag{31b}$$

$$D\left(w_{,xx} + \mu w_{,yy}\right) + \frac{E_s\left(I_s + \bar{z}_s^2 A_s\right)}{d} w_{,xx} - \frac{\bar{z}_s E_s A_s}{d} u_{,x} = 0 \tag{32a}$$

$$\text{or} \quad w_{,x} = 0 \tag{32b}$$

$$\frac{Et}{1 - \mu^2}\left(u_{,x} + \mu v_{,y}\right) + \frac{E_s A_s}{d} u_{,x} - \frac{\bar{z}_s E_s A_s}{d} w_{,xx} = 0 \tag{33a}$$

$$\text{or} \quad u = 0 \tag{33b}$$

$$Gt\left(u_{,y} + v_{,x}\right) = 0 \tag{34a}$$

$$\text{or} \quad v = 0 \tag{34b}$$

and for edges parallel to the x-axis

$$D\left(w_{,yyy} + \mu w_{,xxy}\right) + \frac{E_r\left(I_r + \bar{z}_r^2 A_r\right)}{l} w_{,yyy} - \frac{\bar{z}_r E_r A_r}{l} v_{,yy}$$

$$+ \left(\frac{Gt^3}{3} + \frac{G_s J_s}{d} + \frac{G_r J_r}{l}\right) w_{,yxx} = 0 \tag{35a}$$

$$\text{or} \quad w = 0 \tag{35b}$$

$$D\left(w_{,yy} + \mu w_{,xx}\right) + \frac{E_r\left(I_r + \bar{z}_r^2 A_r\right)}{l} w_{,yy} - \frac{\bar{z}_r E_r A_r}{l} v_{,y} = 0 \tag{36a}$$

$$\text{or} \quad w_{,y} = 0 \tag{36b}$$

$$\frac{Et}{1 - \mu^2}\left(v_{,y} + \mu u_{,x}\right) + \frac{E_r A_r}{l} v_{,y} - \frac{\bar{z}_r E_r A_r}{l} w_{,yy} = 0 \tag{37a}$$

$$\text{or} \quad v = 0 \tag{37b}$$

$$Gt\left(u_{,y} + v_{,x}\right) = 0 \tag{38a}$$

$$\text{or} \quad u = 0 \tag{38b}$$

In addition to these boundary conditions the following relationship must be satisfied at free corners:

$$w_{,xy} = 0 \tag{39}$$

It should be noted that, even though this theory is linear, the inplane displacements u and v are involved in the boundary conditions for one-sided stiffened plates. For the case of symmetric stiffening $\bar{z}_s = \bar{z}_r = 0$, the boundary conditions given in expressions (31), (32), (35), and (36) uncouple from the inplane displacements and the other boundary conditions, expressions (33), (34), (37), and (38), need not be considered.

The flat-plate equilibrium equations and boundary conditions may also be written in terms of stress and moment resultants as was done for the stiffened cylinder in the previous section.

SOLUTIONS FOR SIMPLY SUPPORTED CYLINDERS AND PLATES

Solutions are presented for the natural frequencies of vibration of simply supported cylinders and plates with eccentric stiffening. These solutions illustrate in a straightforward manner some of the significant effects of stiffener eccentricity on the vibration behavior of such structures.

Stiffened Cylinder

The coordinate system chosen has its origin located at one end of the cylinder. The simple-support boundary conditions to be satisfied at each end $x = 0,a$ are

$$w = M_x = v = N_x = 0 \tag{40}$$

The expressions for the displacements u, v, and w, which satisfy these boundary conditions, are given as

$$\left.\begin{aligned} u &= \bar{u} \cos \frac{m\pi x}{a} \cos \frac{ny}{R} \\ v &= \bar{v} \sin \frac{m\pi x}{a} \sin \frac{ny}{R} \\ w &= \bar{w} \sin \frac{m\pi x}{a} \cos \frac{ny}{R} \end{aligned}\right\} \tag{41}$$

where m is the number of axial half waves and n is the number of circumferential full waves. After substitution of equations (41) into the equilibrium equations (eqs. (11), (12), and (13)) the following equation is obtained after some manipulation:

$$\begin{bmatrix} -\left[1 + \bar{S}\left(1 - \mu^2\right) + \beta^2\left(\frac{1 - \mu}{2}\right)\right] & -\left(\frac{1 + \mu}{2}\right) & \left[\mu + \bar{S}\left(\frac{\bar{z}_s}{R}\right)\left(1 - \mu^2\right)\alpha^2\right] \\ -\left(\frac{1 + \mu}{2}\right) & -\left[1 + \bar{R}\left(1 - \mu^2\right) + \frac{1 - \mu}{2\beta^2}\right] & \left[1 + \bar{R}\left(1 - \mu^2\right) + \left(\frac{\bar{z}_r}{R}\right)\bar{R}\left(1 - \mu^2\right)n^2\right] \\ \left[\mu + \bar{S}\left(\frac{\bar{z}_s}{R}\right)\left(1 - \mu^2\right)\alpha^2\right] & \left[1 + \bar{R}\left(1 - \mu^2\right) + \left(\frac{\bar{z}_r}{R}\right)\bar{R}\left(1 - \mu^2\right)n^2\right] & B_{33} \end{bmatrix} \begin{bmatrix} \bar{u} \\ \bar{v} \\ \bar{w} \end{bmatrix} = \begin{bmatrix} 0 \\ 0 \\ 0 \end{bmatrix} \tag{42}$$

where

$$B_{33} = -\frac{D\alpha^4\left(1-\mu^2\right)\left(1+\beta^2\right)^2}{EtR^2} - 1 - \bar{R}\left(1-\mu^2\right) + \frac{M\omega^2R^2\left(1-\mu^2\right)}{Et}$$

$$-\frac{E_s\alpha^4\left(1-\mu^2\right)\left(I_s+\bar{z}_s^2A_s\right)}{R^2dEt} - \frac{E_rn^4\left(1-\mu^2\right)\left(I_r+\bar{z}_r^2A_r\right)}{R^2lEt} - 2\bar{R}n^2\left(\frac{\bar{z}_r}{R}\right)\left(1-\mu^2\right)$$

$$-\left(\frac{G_sJ_s}{d}+\frac{G_rJ_r}{l}\right)\left[\frac{\alpha^2n^2\left(1-\mu^2\right)}{EtR^2}\right]$$

and the following nondimensional parameters are defined:

$$\beta = \frac{na}{m\pi R} \qquad \bar{S} = \frac{E_sA_s}{Etd}$$

$$\alpha = \frac{m\pi R}{a} \qquad \bar{R} = \frac{E_rA_r}{Etl}$$

To obtain a nontrivial solution, the determinant of the coefficients of $\bar{u}$, $\bar{v}$, and $\bar{w}$ is set equal to zero. After more manipulation, the following nondimensional frequency equation is obtained:

$$\frac{Ma^4\omega^2}{\pi^4D} = m^4\left(1+\beta^2\right)^2 + m^4\left[\frac{E_sI_s}{Dd} + \beta^2\left(\frac{G_sJ_s}{Dd}+\frac{G_rJ_r}{Dl}\right) + \beta^4\frac{E_rI_r}{Dl}\right]$$

$$+\frac{12Z^2}{\pi^4}\left(\frac{1+\bar{S}\Lambda_s+\bar{R}\Lambda_r+\bar{S}\bar{R}\Lambda_{rs}}{\Lambda}\right) \tag{43}$$

where

$$\Lambda_s = 1 + 2\alpha^2\left(\frac{\bar{z}_s}{R}\right)\left(\beta^2-\mu\right) + \alpha^4\left(\frac{\bar{z}_s}{R}\right)^2\left(1+\beta^2\right)^2 \tag{44a}$$

$$\Lambda_r = 1 + 2n^2\left(\frac{\bar{z}_r}{R}\right)\left(1-\beta^2\mu\right) + n^4\left(\frac{\bar{z}_r}{R}\right)^2\left(1+\beta^2\right)^2 \tag{44b}$$

$$\Lambda_{rs} = n^2\alpha^2\left[\beta^2\left(1 - \mu^2\right) + 2(1 + \mu)\right]\left(\frac{\bar{z}_s}{R}\right)^2 + n^4\left[1 - \mu^2 + 2\beta^2(1 + \mu)\right]\left(\frac{\bar{z}_r}{R}\right)^2$$

$$+ 2n^2\left(1 - \mu^2\right)\left(\frac{\bar{z}_s}{R}\right) + 2n^2\left(1 - \mu^2\right)\left(\frac{\bar{z}_r}{R}\right) + 2n^4(1 + \mu)^2\left(\frac{\bar{z}_r}{R}\right)\left(\frac{\bar{z}_s}{R}\right) + 1 - \mu^2 \qquad (44c)$$

$$\Lambda = \left(1 + \beta^2\right)^2 + 2\beta^2(1 + \mu)(\bar{R} + \bar{S}) + \left(1 - \mu^2\right)\left[\bar{S} + \beta^4\bar{R} + 2\beta^2\bar{R}\bar{S}(1 + \mu)\right] \qquad (44d)$$

and another nondimensional parameter $Z^2 = \frac{a^4\left(1 - \mu^2\right)}{R^2t^2}$ has been defined.

In equation (43), the effect of eccentricity of stiffening is reflected by the terms containing $\bar{z}_s$ and $\bar{z}_r$. The quantities $\bar{z}_s$ and $\bar{z}_r$ are positive when the stiffeners are located on the external surface of the cylinder and negative when the stiffeners are on the internal surface so that sign changes can occur in equation (43). Notice that the quantity $\left(\beta^2 - \mu\right)$ in Λ_s and the quantity $\left(1 - \beta^2\mu\right)$ in Λ_r can also change signs depending upon the cylinder geometry and vibration mode shape. These facts suggest that some caution should be exercised in drawing general conclusions as to the influence of eccentricity of stiffening on the vibration behavior of stiffened cylinders.

Stiffened Flat Plates

A coordinate system is chosen having its origin at one corner of a plate of length a and width b. The simple-support boundary conditions which must be satisfied are

$$w(0,y) = w(a,y) = w(x,0) = w(x,b) = 0$$

$$M_x(0,y) = M_x(a,y) = M_y(x,0) = M_y(x,b) = 0$$

$$N_x(0,y) = N_x(a,y) = N_y(x,0) = N_y(x,b) = 0$$

$$v(0,y) = v(a,y) = u(x,0) = u(x,b) = 0$$

Expressions for the displacements u, v, and w which satisfy these boundary conditions are

$$\left.\begin{aligned} u &= \bar{u} \cos \frac{m\pi x}{a} \sin \frac{n\pi y}{b} \\ v &= \bar{v} \sin \frac{m\pi x}{a} \cos \frac{n\pi y}{b} \\ w &= \bar{w} \sin \frac{m\pi x}{a} \sin \frac{n\pi y}{b} \end{aligned}\right\} \tag{45}$$

where for flat plates m and n are the numbers of half waves in the x- and y-directions, respectively.

Following a procedure similar to that used in the previous section, the following nondimensional frequency equation is obtained:

$$\frac{Ma^4\omega^2}{\pi^4 D} = m^4\left(1 + \beta^2\right)^2 + m^4\left[\frac{E_s I_s}{Dd} + \beta^2\left(\frac{G_s J_s}{Dd} + \frac{G_r J_r}{Dl}\right) + \beta^4 \frac{E_r I_r}{Dl}\right]$$

$$+ 12\left(1 - \mu^2\right)m^4\left\{\frac{\bar{S}\left(1 + \beta^2\right)^2\left(\frac{\bar{z}_s}{t}\right)^2 + \bar{R}\beta^4\left(1 + \beta^2\right)^2\left(\frac{\bar{z}_r}{t}\right)^2 + \bar{R}\bar{S}C}{\left(1 + \beta^2\right)^2 + 2\beta^2(1 + \mu)(\bar{R} + \bar{S}) + \left(1 - \mu^2\right)\left[\bar{S} + \beta^4\bar{R} + 2\beta^2\bar{R}\bar{S}(1 + \mu)\right]}\right\} \tag{46}$$

where

$$C = \beta^2\left[\beta^2\left(1 - \mu^2\right) + 2(1 + \mu)\right]\left(\frac{\bar{z}_s}{t}\right)^2 + 2\beta^4(1 + \mu)^2\left(\frac{\bar{z}_s}{t}\right)\left(\frac{\bar{z}_r}{t}\right)$$

$$+ \beta^4\left[1 - \mu^2 + 2\beta^2(1 + \mu)\right]\left(\frac{\bar{z}_r}{t}\right)^2 \tag{47}$$

and the following nondimensional parameters are defined:

$$\beta = \frac{na}{mb}, \qquad \bar{S} = \frac{E_s A_s}{Etd}, \qquad \bar{R} = \frac{E_r A_r}{Etl}$$

In equation (46), the terms which involve $\bar{z}_s$ and $\bar{z}_r$ are present because of eccentric stiffening. If the plate is stiffened by only longitudinal or transverse stiffeners, all terms involving $\bar{z}_r$ or $\bar{z}_s$ are squared and hence the surface on which the stiffener is attached is unimportant. However, if both longitudinal and transverse stiffeners are present, the coupling term C defined in equation (47) has a term with the coefficient $\bar{z}_r\bar{z}_s$ which can be negative if the longitudinal and transverse stiffeners are on opposite sides of the plate.

RESULTS AND DISCUSSION

Because of the large number of parameters appearing in the frequency expressions, it is impractical to present results of a general nature. Therefore, computed results for stiffened cylinders and plates with proportions of contemporary interest are presented in order to illustrate the magnitude of eccentricity effects. Results are presented in the form of plots of natural frequencies as a function of mode shape; for each configuration considered the physical properties of the structure are given in the figure.

Stiffened Cylinders

Stringer-stiffened cylinders.- In figure 1, the natural frequencies as obtained from equation (43) are given for a stringer-stiffened cylinder (cylinder 1) with physical properties similar to one of the integrally stiffened cylinders considered in reference 6. The lowest natural frequency for stringers attached to the outside occurs at a higher mode number n and is approximately 35 percent higher than the lowest natural frequency for the same stringers attached to the inside.

As a matter of interest, natural frequencies were calculated for a cylinder with the same physical properties as those given in figure 1 except that the depth of the stringers was changed from 0.302 inch (0.767 cm) to 0.50 inch (1.27 cm). These frequencies are not plotted, but the lowest natural frequency for external stiffeners was 64 percent higher than the lowest natural frequency for internal stiffeners.

In figure 2, the natural frequencies are given for an integrally stringer-stiffened cylinder (cylinder 2) which was studied both experimentally and analytically for compressive buckling in reference 3. Proportions of this cylinder simulate a projected design of the wall of a 33-foot (10.6-m) diameter tank for a nuclear upper stage of a large launch vehicle (ref. 3). From figure 4, it can be seen that the eccentricity effects can be important even in very large-diameter stiffened cylinders of practical proportions. The lowest natural frequency for this case was approximately 35 percent higher for external stiffeners than for internal stiffeners. To the left of the point where the curves cross, internal stringers give a higher frequency than external stringers since the term $\left(\beta^2 - \mu\right)$ in equation (44a) has changed sign and become negative.

Ring-stiffened cylinders.- In figure 3, the natural frequencies are plotted for a ring-stiffened cylinder. This configuration (cylinder 3) was obtained by replacing the stringers on the cylinder of figure 1 (cylinder 1) with rings of the same cross section and spacing. For this case, the eccentricity effects are not very large. The lowest natural frequency is 6 percent higher for rings on the inside than for rings on the outside. Notice, however, that for $m = 2$, external rings give a higher frequency at the lower portion of the curves than internal rings. This situation can be explained by examination of the term which involves $\left(1 - \beta^2\mu\right)$ in equation (44b). For a cylinder which is stiffened with only rings, this term is the only one which can change sign. For small β

(where $1 - \beta^2\mu > 0$), external rings give a higher frequency than internal rings. As β increases, $(1 - \beta^2\mu)$ eventually becomes negative at which time internal rings will give a higher frequency than external rings. The crossings on the curves for $m = 1$ and for $m = 2$ can be found by setting $(1 - \beta^2\mu)$ equal to zero and solving for n.

The situation for a cylinder which is stiffened with both rings and stringers is further complicated by the coupling term Λ_{rs} in equation (43). To determine the influence of internal or external stiffening for this case, the natural frequencies must be investigated from equation (43) for the specific cylinder of interest.

Stiffened Flat Plates

The natural frequencies for a flat plate which is stiffened in both directions are plotted in figure 4. The plate and stiffener proportions are similar to those of stiffened cylinder 1 (fig. 1). As can be seen in the figure, the frequencies are higher for the case where all the stiffeners are on the same surface of the plate. When the stiffeners in the y-direction are on the surface opposite those in the x-direction, the product $\bar{z}_r\bar{z}_s$ in equation (47) is negative and the frequencies are consequently lowered. For stiffeners in only one direction, the surface upon which the stiffeners are attached is unimportant; however, eccentricity effects must still be accounted for in order to determine the frequencies accurately.

CONCLUDING REMARKS

A small deflection theory is used to derive dynamic equilibrium equations for eccentrically stiffened cylinders and flat plates. Inplane inertias are neglected and frequency equations are obtained for the case of simple-support boundary conditions. These frequency equations illustrate the effects of eccentricities and other stiffening parameters.

The stiffening eccentricities are found to have a significant effect on the natural frequencies of both cylinders and plates. It is concluded that stiffener eccentricity effects on vibrations are important and should be considered in the design and dynamic analysis of stiffened structural components.

Langley Research Center,
National Aeronautics and Space Administration,
Langley Station, Hampton, Va., June 1, 1965.

APPENDIX

CONVERSION OF U.S. CUSTOMARY UNITS TO SI UNITS

The International System of Units (SI) was adopted by the Eleventh General Conference on Weights and Measures, Paris, October 1960, in Resolution No. 12 (ref. 9). Conversion factors for the units used herein are given in the following table:

Physical quantity	U.S. Customary Unit	Conversion factor (*)	SI unit
Length	in.	0.0254	meters (m)
	ft	0.3048	meters (m)
Stress	psi = lbf/in^2	6.895×10^3	newtons per sq meter (N/m^2)
Frequency	cps	1	Hertz (Hz)

*Multiply value given in U.S. Customary Unit by conversion factor to obtain equivalent value in SI unit.

Prefixes to indicate multiple of units are as follows:

Prefix	Multiple
giga (G)	10^9
centi (c)	10^{-2}

REFERENCES

1. Van der Neut, A.: The General Instability of Stiffened Cylindrical Shells Under Axial Compression. Rept. S. 314, Natl. Aeron. Res. Inst. (Amsterdam), 1947.

2. Baruch, M.; and Singer, J.: Effect of Eccentricity of Stiffeners on the General Instability of Stiffened Cylindrical Shells Under Hydrostatic Pressure. J. Mech. Eng. Sci., vol. 5, no. 1, 1963, pp. 23-27.

3. Anon.: Theoretical and Experimental Analysis of Orthotropic-Shell Stability. LMSC-A701014, Lockheed Missiles & Space Co., Sept. 11, 1964.

4. Hedgepeth, John M.; and Hall, David B.: Stability of Stiffened Cylinders. Paper No. 65-79. Am. Inst. Aeron. Astronaut., Jan. 1965.

5. Block, David L.; Card, Michael F.; and Mikulas, Martin M., Jr.: Buckling of Eccentrically Stiffened Orthotropic Cylinders. NASA TN D-2960, 1965.

6. Card, Michael F.: Preliminary Results of Compression Tests on Cylinders With Eccentric Longitudinal Stiffeners. NASA TM X-1004, 1964.

7. Sewall, John L.; Clary, Robert R.; and Leadbetter, Sumner A.: An Experimental and Analytical Vibration Study of a Ring-Stiffened Cylindrical Shell Structure With Various Support Conditions. NASA TN D-2398, 1964.

8. Hoppmann, W. H., II: Flexural Vibrations of Orthogonally Stiffened Cylindrical Shells. Tech. Rept. No. 11 (Contract Nonr-248(12)), Dept. Mech. Eng., The Johns Hopkins Univ., July 1956.

9. Mechtly, E. A.: The International System of Units - Physical Constants and Conversion Factors. NASA SP-7012, 1964.

10. Reissner, Eric; and Stein, Manuel: Torsion and Transverse Bending of Cantilever Plates. NACA TN 2369, 1951.

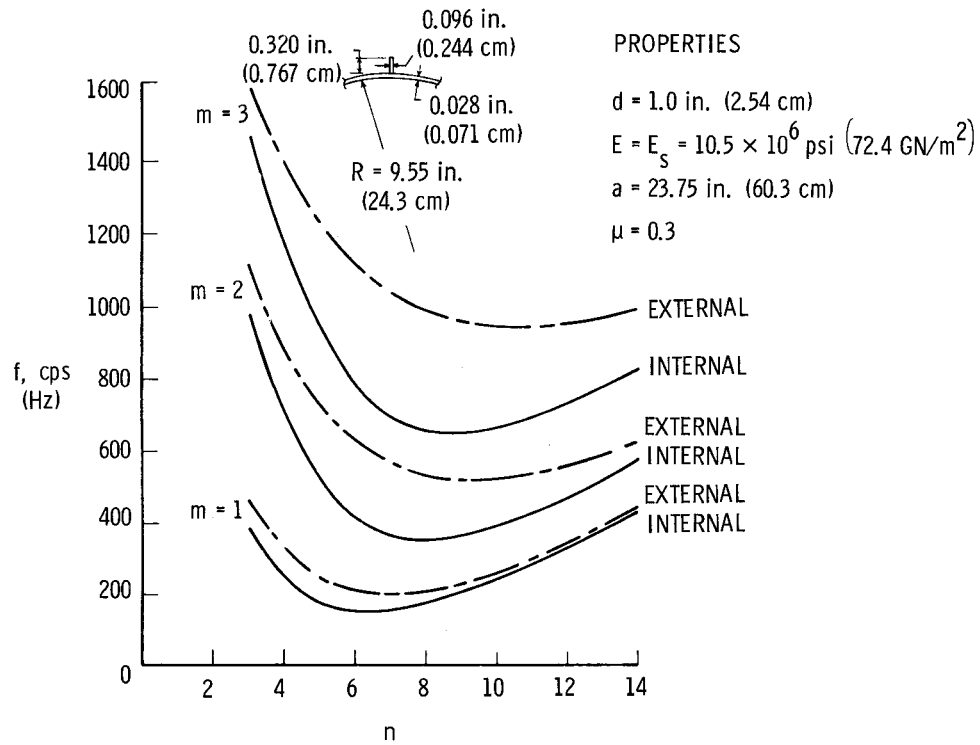

Figure 1.- Natural frequencies of stringer-stiffened cylindrical shell (cylinder 1).

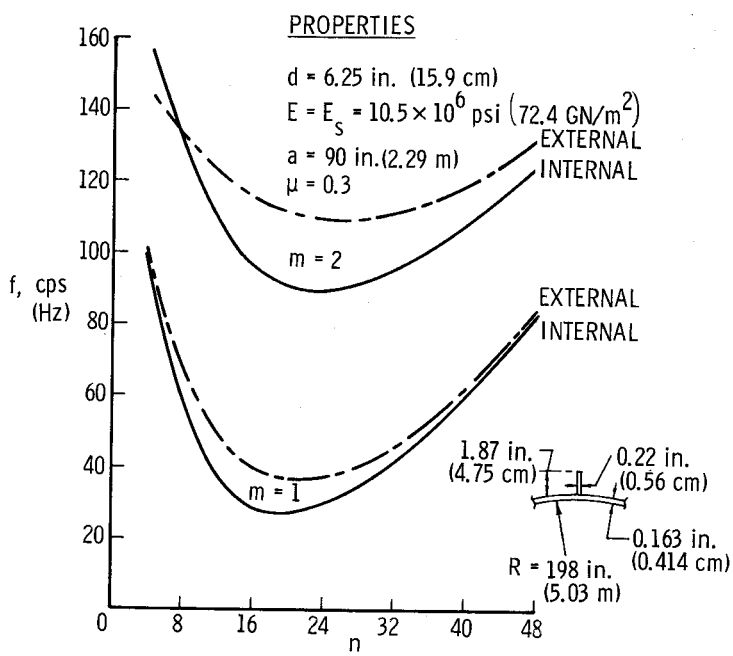

Figure 2.- Natural frequencies of stringer-stiffened cylindrical shell (cylinder 2).

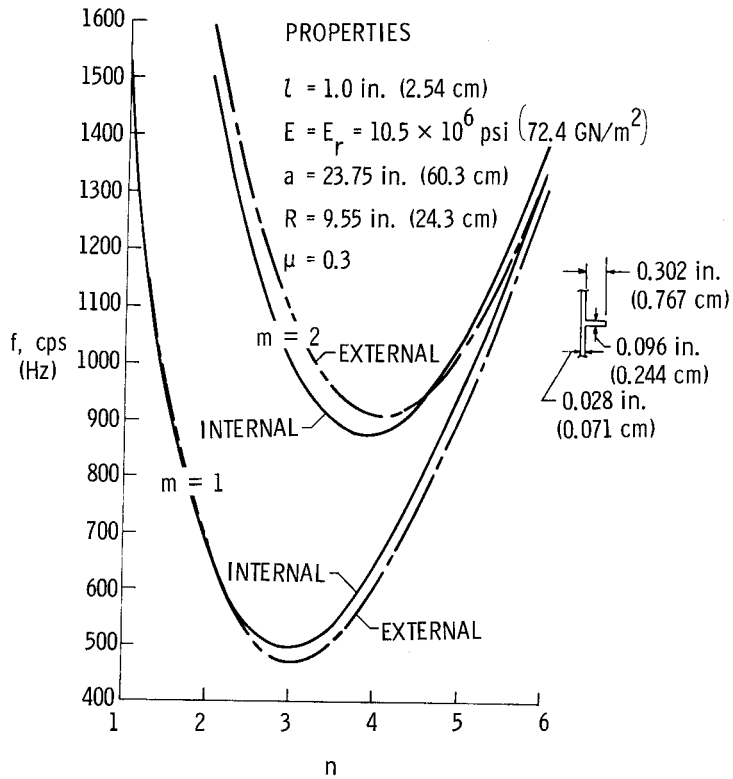

Figure 3.- Natural frequencies of ring-stiffened cylindrical shell (cylinder 3).

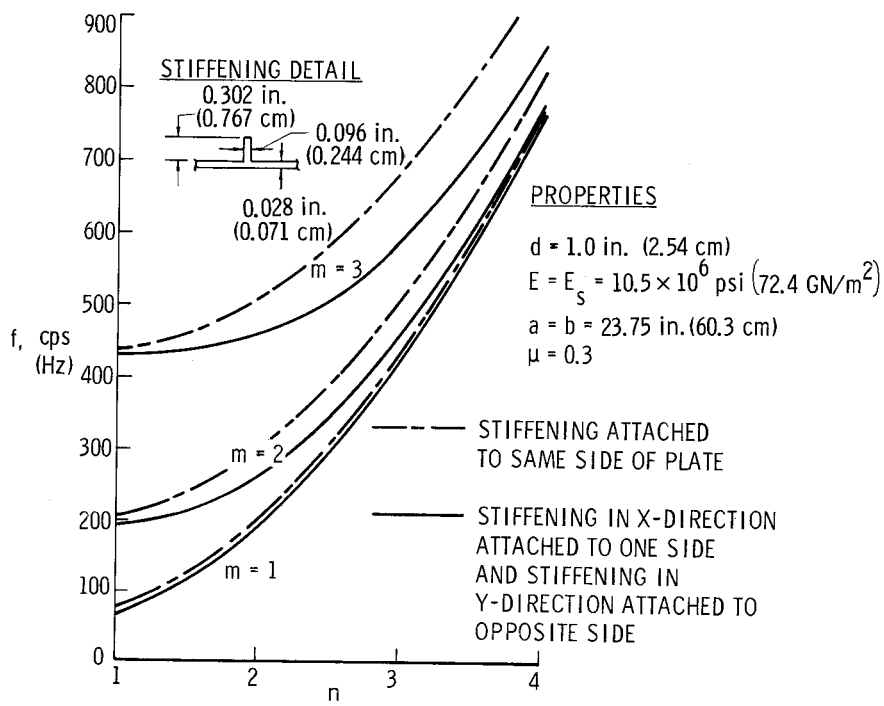

Figure 4.- Natural frequencies for square plate stiffened in x- and y-direction.