NASA Technical Memorandum 112874

Viscous Driven-Cavity Solver
User's Manual

William A. Wood
Langley Research Center, Hampton, Virginia

September 1997

National Aeronautics and
Space Administration
Langley Research Center
Hampton, Virginia 23681-0001

Viscous Driven-Cavity Solver
User's Manual

William A. Wood*
NASA Langley Research Center

September 29, 1997

Abstract

The viscous driven cavity problem is solved using a stream-function and vorticity formulation for the incompressible Navier-Stokes equations. Analytical development and results are presented by Wood[1]. Convergence is accelerated by employing grid sequencing and a V-cycle multigrid relaxation. The formulation is second-order accurate in space and first-order implicit in time. The coefficients are lagged to loosely couple the stream-function and vorticity equations. The linearized system is relaxed with symmetric Gauß-Seidel.

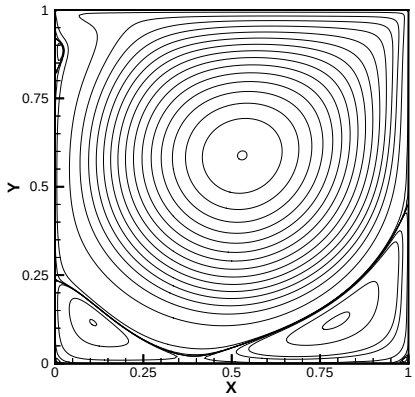

*Aerospace Technologist, Aerothermodynamics Branch, Aero- and Gas-Dynamics Division. w.a.wood@larc.nasa.gov (757) 864-8355.

Contents

Introduction

The present document is the FORTRAN source code for solving the incompressible Navier-Stokes equations inside a two-dimensional driven cavity. The governing equations are cast in a stream-function/vorticity formulation as presented by Wood[1].

Results presented in Ref. [1] focus on streamline patterns, stability issues, and multigrid performance. Additional results presented here provide numerical tabulations and comparisons with results from literature.

The source code is in three parts. The file `params.inc` contains the grid dimensions while the file `cavity.inp` contains the input deck. The file `cavity.f` is the bulk of the code. To execute, compile `cavity.f` and run. This visual User's Manual is derived from the source code *via* processing with the LaTeX2$_\varepsilon$ software.

Following the Introduction are the two files which are typically edited between solutions, `params.inc` and `cavity.inp`. Then follows the driver routine and the subroutines, each as a separate section of the manual.

Params.inc

The parameter file, `params.inc`, for `cavity` sets the number of points in i and j as `imax` and `jmax`.

```
c     parameter file for cavity  ... ........................     params.inc

      parameter ( imax = 257, jmax = 257 )
      parameter ( imxmed = (imax+1)/2, jmxmed = (jmax+1)/2 )
      parameter ( imxcor = (imxmed+1)/2, jmxcor = (jmxmed+1)/2 )

      dimension dx(imax, jmax, 2), x(imax, jmax, 2),
     $     f(imax, jmax, 5),
     $     alam(imax, jmax, 2), sig(imax, jmax, 2)

      dimension fmed(imax, jmax, 5), fcor(imax, jmax, 5)

      dimension aij(imax, jmax), aip1(imax, jmax), aim1(imax, jmax),
     $     ajp1(imax, jmax), ajm1(imax, jmax), b(imax, jmax),
     $     res(imax, jmax, 5, 3)

      common / vars / ntot, dx, x, f, alam, sig, fmed, fcor
      common / vecs / aij, aip1, aim1, ajp1, ajm1, b, res
```

The dependent variables are stored in $f(i, j, var)$ where var takes on values of 1–5 corresponding to $(u,\ v,\ \zeta,\ P,\ \psi)$.

Cavity.inp

The input deck is `cavity.inp`.

```
input deck to cavity   ....................................      cavity.inp
 $grids
alength = 1.
height  = 1.
igrid   = 0
beta    = 1.4
 $
 $conditions
alammax = 1.
sigmax  = 1.
re      = 2000.
ubig    = 1.
igov    = 2
nitsgs  = 1
niterp  = 1000
convg   = 5.e-5
iskpout = 50
img     = 2
 $

c alength - cavity length
c height  - cavity height
c igrid   - 0 = uniform grid
c           1 - beta clustering to edges
c beta    - clustering strength > 1
c alammax - CFL-like number for inviscid terms
c sigmax  - CFL-like number for viscous terms
c re      - Reynolds number = ubig * alength / nu
c ubig    - upper boundary speed
c igov    - 1 = primitive variables formulation
c           2 = stream function/vorticity formulation
c nitsgs  - number of sgs sub-sweeps
c niterp  - maximum number of iterations
c convg   - convergence tolerance
c iskpout - convergence history output skip
c img     - 0 = fine mesh only
c           1 = mesh sequencing
c           2 = mesh sequencing + V-cycle multigrid
```

Main Driver

The driver routine contains the logic for mesh sequencing and if multigrid is desired. Subroutines called: `inputs, grid, dxdy, initial, timestep, solvr, restrict, bc, prolong, multig, outsol.` The subroutines follow in that order (the order in which they are called).

This code was originally computer assignment 1 for Applied Science 778 at William & Mary, 1996.

```
      program cavity
```

Load dimension, common, and parameter statements.

```
      include 'params.inc'
      logical istop

      common / parms / alength, alammax, sigmax, re, height, ubig,
     $     igov, nitsgs, niterp, convg, iskpout, img, istop,
     $     igrid, beta
      common / parm2 / cpustart, dxfin, dxmed, dxcor, iskpfin,
     $     iskpmed, iskpcor, resid0, nout
```

Default initial values.

```
      istop   = .false.     ! Stopping flag
      dxfin   = 1.          ! Fine grid 1:1 spacing, relative to fine
      dxmed   =  .5         ! Medium grid 1:2 spacing, relative to fine
      dxcor   =  .25        ! Coarse grid 1:4 spacing, relative to fine
      iskpfin = 1
      iskpmed = 2           ! Medium grid coarsed by 2 relative to fine
      iskpcor = 4           ! Coarse grid coarsed by 4 relative to fine
      ntot    = 0
```

Load input deck, `cavity.inp`.

```
      call inputs
```

Set CPU timer at start of main routine. `etime` is timer for SUN and SGI. `atime1, atime2` are dummy variables.

```
      cpustart = etime( atime1, atime2 )
```

Generate the fine grid.

```
      imx1 = imax
      jmx1 = jmax
      call grid ( igrid, imx1, jmx1, alength, height, beta )
```

Define dx and dy grid spacings on finest grid.

```
      call dxdy ( imx1, jmx1 )
```

Initialize flowfield on finest grid.

```
      call initial ( imx1, jmx1, ubig, dxfin, iskpfin, f(1,1,1) )
```

Set dt—time step size, and lambda, sigma coefficients.

```
      call timestep ( alammax, sigmax, re )
```

Run 1 timestep on fine mesh to get starting residual—`resid0`.

```
      resid0 = -1.
      call solvr ( 1, 0, imx1, jmx1, igov, dxfin, iskpfin,
     $     nitsgs, re, ubig, resid0, istop, convg, nout,
     $     iskpout, cpustart, f(1,1,1) )
```

Skip mesh sequencing if `img`=0. Perform mesh sequencing if `img`=1 or 2.

```
      if ( img .eq. 0 ) go to 100
```

Mesh Sequencing

Restrict from fine to medium mesh.

```
      call restrict ( imxmed, jmxmed, f(1,1,1), fmed(1,1,1) )
```

Restrict from medium to coarse mesh.

```
      call restrict ( imxcor, jmxcor, fmed(1,1,1), fcor(1,1,1) )
```

Impose boundary conditions.

```
      call bc ( igov, imxcor, jmxcor, ubig, re, iskpcor, dxcor,
     $     fcor(1,1,1) )
```

Iterate on coarse mesh for `nitc` iterations. Options for the number of iterations to perform are,

$$Nit_c = \frac{Imax_c \cdot Jmax_c}{2}$$

$$Nit_c = \max\left(Imax_c,\ Jmax_c\right)$$

$$Nit_c = Imax_c + Jmax_c$$

```
      nitc = imxcor * jmxcor / 2
c      nitc = max( imxcor, jmxcor )
c      nitc = imxcor + jmxcor
```

Limit the number of iterations on the coarse mesh to be no more than twice the maximum number of fine mesh iterations.

```
      nitc = min( nitc, niterp + niterp )
      call solvr ( nitc, 0, imxcor, jmxcor, igov, dxcor, iskpcor,
     $     nitsgs, re, ubig, resid0, istop, convg, nout,
     $     iskpout, cpustart, fcor(1,1,1) )
```

Prolongate from coarse to medium mesh, impose boundary conditions, and relax on medium mesh.

```
      call prolong ( imxcor, jmxcor, fmed(1,1,1), fcor(1,1,1) )
      call bc ( igov, imxmed, jmxmed, ubig, re, iskpmed, dxmed,
     $     fmed(1,1,1) )
      nitc = imxmed * jmxmed / 2
c      nitc = max( imxmed, jmxmed )
c      nitc = imxmed + jmxmed
      nitc = min( nitc, niterp + niterp )
      call solvr ( nitc, 0, imxmed, jmxmed, igov, dxmed, iskpmed,
     $     nitsgs, re, ubig, resid0, istop, convg, nout,
     $     iskpout, cpustart, fmed(1,1,1) )
```

Now prolongate from medium to fine mesh and impose boundary conditions. Ready to relax on fine mesh.

```
      call prolong ( imxmed, jmxmed, f(1,1,1), fmed(1,1,1) )
      call bc ( igov, imax, jmax, ubig, re, iskpfin, dxfin,
     $     f(1,1,1) )
```

Skip point for bypassing mesh sequencing.

```
 100  continue
```

Relaxation on Fine Mesh

Is multigrid desired? If so, `img`=2, and we go to subroutine `multig` to converge solution. Otherwise, we relax on the fine grid only.

```
      if ( img .eq. 2 ) then
        call multig

      else
        call solvr ( niterp, 0, imax, jmax, igov, dxfin, iskpfin,
     $       nitsgs, re, ubig, resid0, istop, convg, nout,
     $       iskpout, cpustart, f(1,1,1) )
      end if
```

Output solution and end of program.

```
      call outsol ( imx1, jmx1, nout )
      stop
      end
```

Inputs

`Inputs` reads the input deck `cavity.inp` using the `namelist` construct. It is called from `cavity`.

```
      subroutine inputs  !  ........................       inputs

      common / parms / alength, alammax, sigmax, re, height, ubig,
     $     igov, nitsgs, niterp, convg, iskpout, img, istop,
     $     igrid, beta

      logical istop

      namelist / grids / alength, height, igrid, beta
      namelist / conditions / alammax, sigmax, re, ubig, igov,
     $     nitsgs, niterp, convg, iskpout, img

      open ( 9, file = 'cavity.inp', form = 'formatted' )
      read ( 9, * )
      read ( 9, grids )
      read ( 9, conditions )

      return
      end
```

Grid

`Grid` is a 2-D grid generator for rectangular domains. The lower-left corner is set at the origin. Called by `cavity`.

`igrid` = 0 — uniform spacing in x and y

`igrid` = 1 — Clustering to all walls, of strength $\beta > 1$, with stronger clustering as $\beta \to 1$.

```
subroutine grid ( igrid, imx, jmx, width, height, beta ) !..grid

include 'params.inc'
```

Δx and Δy for uniform spacing.

```
dx1 = 1. / float( imx - 1 )
dy1 = 1. / float( jmx - 1 )
```

$\beta + 1$ and $\beta - 1$.

```
bp1 = beta + 1.
bm1 = beta - 1.
d = .5
```

Set $x = 0$ on the left-hand boundary and $x = \mathit{width}$ on the right-hand boundary. $x(i, j, 1) = x$-coordinate, $x(i, j, 2) = y$-coordinate.

```
do j = 1, jmx
  x(1,  j,1) = 0.
  x(imx,j,1) = width
end do
```

Set $y = 0$ on the lower boundary and $y = \mathit{height}$ on the upper boundary.

```
do i = 1, imx
  x(i,  1,2) = 0.
  x(i,jmx,2) = height
end do
```

Assign x values between left ($i = 1$) and right ($i = imx$) sides. `x1` is the arclength fraction of the distance from the left to right for the current point.

```
do i = 2, imx-1
```

Either uniform spacing,

$$x_1 = \Delta x(i-1) = \frac{i-1}{i_{max} - 1}$$

```
x1 = dx1 * float( i - 1 )
```

or beta clustering.

$$x_1 = \frac{T + R(\beta - 1) - (\beta + 1)}{T}$$

where,

$$T = (2d + 1)(R + 1), \quad R = \left(\frac{\beta + 1}{\beta - 1}\right)^{\left(\frac{A-d}{1-d}\right)}, \quad A = \frac{i - 1}{i_{max} - 1}$$

```
  if ( igrid .eq. 1 ) then
    an = x1
    rn = ( bp1 / bm1 )**((an - d) / (1. - d))
    tn = ( 2. * d + 1. ) * ( rn + 1. )
    x1 = ( tn + rn * bm1 - bp1 ) / tn
  end if

  do j = 1, jmx
    x(i,j,1) = x(1,1,1) + x1 * width
  end do
end do
```

Fill in the y values between bottom ($j = 1$) and top ($j = jmx$) using the same spacing variation as in the x direction.

```
do j = 2, jmx-1

    y1 = dy1 * float( j - 1 )

  if ( igrid .eq. 1 ) then
    an = y1
    rn = ( bp1 / bm1 )**((an - d) / (1. - d))
    tn = ( 2. * d + 1. ) * ( rn + 1. )
    y1 = ( tn + rn * bm1 - bp1 ) / tn
  end if

  do i = 1, imx
    x(i,j,2) = x(1,1,2) + y1 * height
  end do
end do

return
end
```

dxdy

Computes Δx and Δy grid spacings on a cartesian-aligned rectangular grid. Second-order central differencing used for interior points. Second-order one-sided differencing used for boundary points. Called by `cavity`.

```
subroutine dxdy ( imx, jmx )  !  ........................    dxdy

include 'params.inc'
```

At interior points $\Delta x = \frac{1}{2}\left(x_{i+1} - x_{i-1}\right)$

```
do i = 2, imx - 1
  dx1 = ( x(i+1,1,1) - x(i-1,1,1) ) * .5
  do j = 1, jmx
    dx(i,j,1) = dx1
  end do
end do
```

At the left end $\Delta x = \frac{1}{2}(-3x_1 + 4x_2 - x_3)$

```
dx1 = ( -3. * x(1,1,1) + 4. * x(2,1,1) - x(3,1,1) ) * .5
do j = 1, jmx
  dx(1,j,1) = dx1
end do
```

At the right end $\Delta x = \frac{1}{2}(3x_{imx} - 4x_{imx-1} + x_{imx-2})$

```
dx1 = ( 3.* x(imx,1,1) - 4.* x(imx-1,1,1) + x(imx-2,1,1) ) * .5
do j = 1, jmx
  dx(imx,j,1) = dx1
end do
```

Now do the same for Δy, interior, bottom, and top points.

```
do j = 2, jmx - 1
  dy1 = ( x(1,j+1,2) - x(1,j-1,2) ) * .5
  do i = 1, imx
    dx(i,j,2) = dy1
  end do
end do
```

Bottom.

```
dy1 = ( -3. * x(1,1,2) + 4. * x(1,2,2) - x(1,3,2) ) * .5
do i = 1, imx
  dx(i,1,2) = dy1
end do
```

Top.

```
dy1 = ( 3.* x(1,jmx,2) - 4.* x(1,jmx-1,2) + x(1,jmx-2,2) ) * .5
do i = 1, imx
  dx(i,jmx,2) = dy1
end do

return
end
```

Initial

Sets initial conditions for zero motion at $t = 0^-$. At $t = 0^+$ the upper surface impulsively started at speed U. Called by `cavity`.

```
subroutine initial ( imx, jmx, u, dxfac, iskp, tf )  !...initial

include 'params.inc'
```

`tf` is the array of solution variables to be initialized.

```
dimension tf(imax,jmax,5)
```

First set everything to zero at $t = 0^-$.

```
do k = 1, 5
  do j = 1, jmx
    do i = 1, imx
      tf(i,j,k) = 0.
    end do
  end do
end do
```

Set the initial pressure to $P_{ref} = 1$.

```
do j = 1, jmx
  do i = 1, imx
    tf(i,j,4) = 1.
  end do
end do
```

Now impulsively start the upper surface with speed $U =$ `ubig`, set in `cavity.inp`.

```
do i = 1, imx
  tf(i,jmx,1) = u                                  ! u-velocity
  tf(i,jmx,3) = 2. * u * dxfac / dx(i,jmax,2)      ! vorticity
end do

return
end
```

Timestep

`timestep`, called from `cavity`, determines the Δt timestep size for either local or global timestepping. Δt is then incorporated into the parameters `alam` and `sig`. `alamx` and `sigx` are analogous to convective and diffusive CFL numbers, respectively, and are set in `cavity.inp`.

```
      subroutine timestep ( alamx, sigx, re )   !....timestep

      include 'params.inc'
```

Initialize `dtmin` = $\min(\Delta t)$ for global timestep option.

```
      dtmin = 2. * alamx * max( dx(2,2,1), dx(2,2,2) )

      do j = 1, jmax
        do i = 1, imax
```

Compute the local convective Δt.

$$\Delta t = 2\lambda_{max} \min(\Delta x,\ \Delta y)$$

```
          dt1 = 2. * alamx * min( dx(i,j,1), dx(i,j,2) )
```

Compute the local diffusive Δt.

$$\Delta t = R_e \sigma_{max} \min(\Delta x^2,\ \Delta y^2)$$

```
          dt2 = re * sigx * min( dx(i,j,1)**2, dx(i,j,2)**2 )
```

The local Δt is the minimum of these timesteps. For global timestepping Δt is the minimum of all the local timesteps.

```
          dt = min( dt1, dt2 )
          dtmin = min( dtmin, dt )
```

Now incorporate Δt into `alam` and `sig` coefficients.

$$\lambda_x = \frac{\Delta t}{2\Delta x}, \quad \lambda_y = \frac{\Delta t}{2\Delta y}$$

$$\sigma_x = \frac{\Delta t}{R_e \Delta x^2}, \quad \sigma_y = \frac{\Delta t}{R_e \Delta y^2}$$

```
          do k = 1, 2
            alam(i,j,k) = dt * .5 / dx(i,j,k)
            sig(i,j,k) = dt / re / dx(i,j,k)**2
          end do

        end do
      end do
```

This section sets a global timestep for all points. If local timestepping is desired, comment out the following do loops.

```
do j = 1, jmax
  do i = 1, imax
    do k = 1, 2
      alam(i,j,k) = dtmin * .5 / dx(i,j,k)
      sig(i,j,k) = dtmin / re / dx(i,j,k)**2
    end do
  end do
end do

return
end
```

Solvr

Linear system solver for $Af = b$. Called by `cavity` and `multig`. Matrix A is filled in subroutine `loada` and the right-hand side (RHS) vector b is assigned in subroutine `loadb`. Subroutines `sgs`, `bc`, `decp`, and `stopping` are also called, and follow `solvr` in this printout. $Af = b$ is solved iteratively in the time variable using symmetric Gauss-Seidel sweeps.

`mg = 0`—working on top level of multigrid (fine grid)
`mg = 1`—descending cycle of error smoothing
`mg = 2`—ascending cycle of error smoothing

```
      subroutine solvr ( niterp, mg, imx, jmx, igov, dxfac, iskp,
     $     nitsgs, re, ubig, resid0, istop, convg, nout, iskpout,
     $     cpustart, tf )                                        !....solvr

      include 'params.inc'
      logical istop
      dimension fold(imax, jmax, 5), tf(imax,jmax,5)
```

Evolve in time until convergence or `niterp` iterations (main loop).

```
      do n = 1, niterp
        ntot = ntot + 1
```

Retain previous solution to check convergence rate.

```
        do k = 1, 5
          do j = 1, jmx
            do i = 1, imx
              fold(i,j,k) = tf(i,j,k)
            end do
          end do
        end do
```

Solve convection/diffusion equations.

$$f_t + uf_x + vf_y - \frac{1}{R_e}\nabla^2 f = -g$$

First step is to load penta-diagonal terms of A matrix in $a_{i,j}$, $a_{i+1,j}$, $a_{i-1,j}$, $a_{i,j+1}$, and $a_{i,j-1}$.

```
        call loada ( 1, imx, jmx, dxfac, iskp, mg, tf(1,1,1) )
```

If we are solving the primitive variables formulation.

```
        if ( igov .eq. 1 ) then
```

Solve for u from, $u_t + uu_x + vu_y = -P_x + \frac{1}{R_e}\nabla^2 u$.

```
          kk = 1
```

Load RHS b vector if evolving on fine grid or the residual if this is a multi-grid error smoothing on a coarse grid.

```
      if ( mg .eq. 0 ) then
        call loadb ( kk, imx, jmx, iskp, dxfac, tf(1,1,1) )
      else
        if ( mg .eq. 1 ) ll = 1
        if ( mg .eq. 2 ) ll = 2
        do jj = 2, jmx-1
          do ii = 2, imx-1
            b(ii,jj) = res(ii,jj,kk,ll)
          end do
        end do
      end if
```

Now perform the symmetric Gauss-Seidel sweeps.

```
      call sgs ( kk, nitsgs, imx, jmx, tf(1,1,1) )
```

Save the residual.

```
      if ( mg .eq. 0 ) ll = 1
      if ( mg .eq. 1 ) ll = 3
      do jj = 2, jmx-1
        do ii = 2, imx-1
          res(ii,jj,kk,ll) = b(ii,jj)
$              -  aij(ii,jj) * tf(ii,jj,kk)
$              - aip1(ii,jj) * tf(ii+1,jj,kk)
$              - aim1(ii,jj) * tf(ii-1,jj,kk)
$              - ajp1(ii,jj) * tf(ii,jj+1,kk)
$              - ajm1(ii,jj) * tf(ii,jj-1,kk)
        end do
      end do
```

Now solve for v from, $v_t + uv_x + vv_y = -P_y + \frac{1}{R_e}\nabla^2 v$.

```
      kk=2
      if ( mg .eq. 0 ) then
        call loadb ( kk, imx, jmx, iskp, dxfac, tf(1,1,1) )
      else
        if ( mg .eq. 1 ) ll = 1
        if ( mg .eq. 2 ) ll = 2
        do jj = 2, jmx-1
          do ii = 2, imx-1
            b(ii,jj) = res(ii,jj,kk,ll)
          end do
        end do
      end if
```

```
      call sgs ( kk, nitsgs, imx, jmx, tf(1,1,1) )
      if ( mg .eq. 0 ) ll = 1
      if ( mg .eq. 1 ) ll = 3
      do jj = 2, jmx-1
        do ii = 2, imx-1
          res(ii,jj,kk,ll) = b(ii,jj)
$             - aij(ii,jj) *  tf(ii,jj,kk)
$             - aip1(ii,jj) * tf(ii+1,jj,kk)
$             - aim1(ii,jj) * tf(ii-1,jj,kk)
$             - ajp1(ii,jj) * tf(ii,jj+1,kk)
$             - ajm1(ii,jj) * tf(ii,jj-1,kk)
        end do
      end do
```

If instead of primitive variables we are solving the stream-function and vorticity equations, we evolve ζ from, $\zeta_t + u\zeta_x + v\zeta_y = \frac{1}{Re}\nabla^2\zeta$.

```
    else if ( igov .eq. 2 ) then

      kk = 3
      if ( mg .eq. 0 ) then
        call loadb ( kk, imx, jmx, iskp, dxfac, tf(1,1,1) )
      else
        if ( mg .eq. 1 ) ll = 1
        if ( mg .eq. 2 ) ll = 2
        do jj = 2, jmx-1
          do ii = 2, imx-1
            b(ii,jj) = res(ii,jj,kk,ll)
          end do
        end do
      end if
      call sgs ( kk, nitsgs, imx, jmx, tf(1,1,1) )
      if ( mg .eq. 0 ) ll = 1
      if ( mg .eq. 1 ) ll = 3
      do jj = 2, jmx-1
        do ii = 2, imx-1
          res(ii,jj,kk,ll) = b(ii,jj)
$             - aij(ii,jj) * tf(ii,jj,kk)
$             - aip1(ii,jj) * tf(ii+1,jj,kk)
$             - aim1(ii,jj) * tf(ii-1,jj,kk)
$             - ajp1(ii,jj) * tf(ii,jj+1,kk)
$             - ajm1(ii,jj) * tf(ii,jj-1,kk)
        end do
      end do

    else
      write (6,*) ' bad value for igov = ', igov
```

```
      endif
```

Having evolved the convective/diffusive equations, the Poisson equations remain to be solved.

$$-\nabla^2 f = -g$$

Load penta-diagonal terms for A matrix.

```
      call loada ( 2, imx, jmx, dxfac, iskp, mg, tf(1,1,1) )
```

If using the primitive variables formulation we solve for P.

```
      if ( igov .eq. 1 ) then

        kk = 4
        if ( mg .eq. 0 ) then
          call loadb ( kk, imx, jmx, iskp, dxfac, tf(1,1,1) )
        else
          if ( mg .eq. 1 ) ll = 1
          if ( mg .eq. 2 ) ll = 2
          do jj = 2, jmx-1
            do ii = 2, imx-1
              b(ii,jj) = res(ii,jj,kk,ll)
            end do
          end do
        end if
        call sgs ( kk, nitsgs, imx, jmx, tf(1,1,1) )
        if ( mg .eq. 0 ) ll = 1
        if ( mg .eq. 1 ) ll = 3
        do jj = 2, jmx-1
          do ii = 2, imx-1
            res(ii,jj,kk,ll) = b(ii,jj)
$                - aij(ii,jj) * tf(ii,jj,kk)
$                - aip1(ii,jj) * tf(ii+1,jj,kk)
$                - aim1(ii,jj) * tf(ii-1,jj,kk)
$                - ajp1(ii,jj) * tf(ii,jj+1,kk)
$                - ajm1(ii,jj) * tf(ii,jj-1,kk)
          end do
        end do
```

Otherwise solve for the stream-function ψ from, $\nabla^2\psi = \zeta$.

```
      else
        kk = 5
        if ( mg .eq. 0 ) then
          call loadb ( kk, imx, jmx, iskp, dxfac, tf(1,1,1) )
        else
          if ( mg .eq. 1 ) ll = 1
          if ( mg .eq. 2 ) ll = 2
```

```
          do jj = 2, jmx-1
            do ii = 2, imx-1
              b(ii,jj) = res(ii,jj,kk,ll)
            end do
          end do
        end if
        call sgs ( kk, nitsgs, imx, jmx, tf(1,1,1) )
        if ( mg .eq. 0 ) ll = 1
        if ( mg .eq. 1 ) ll = 3
        do jj = 2, jmx-1
          do ii = 2, imx-1
            res(ii,jj,kk,ll) = b(ii,jj)
$             - aij(ii,jj) * tf(ii,jj,kk)
$             - aip1(ii,jj) * tf(ii+1,jj,kk)
$             - aim1(ii,jj) * tf(ii-1,jj,kk)
$             - ajp1(ii,jj) * tf(ii,jj+1,kk)
$             - ajm1(ii,jj) * tf(ii,jj-1,kk)
          end do
        end do
      end if
```

If we are performing an update on the fine mesh then update the boundary points. Also, for the stream-function/vorticity formulation the velocities and pressure need to be decoded at the interior points. Otherwise, if this is an error smoothing iteration, skip this section.

```
      if ( mg .eq. 0 ) then

        call bc ( igov, imx, jmx, ubig, re, iskp, dxfac,
$          tf(1,1,1) )

        if ( igov .eq. 2 ) then
```

Decode the velocities.

```
          do j = 2, jmx-1
            j1 = ( j - 1 ) * iskp + 1
            do i =2, imx-1
              i1 = ( i - 1 ) * iskp + 1
              tf(i,j,1) = .5 * ( tf(i,j+1,5) - tf(i,j-1,5) )
$                / dx(i1,j1,2) * dxfac
              tf(i,j,2) = .5 * ( tf(i-1,j,5) - tf(i+1,j,5) )
$                / dx(i1,j1,1) * dxfac
            end do
          end do
```

Decode the pressure by iterating on the Poisson equation.

```
          call decp ( imx, jmx, iskp, tf(1,1,1) )
        end if
      end if
```

Check convergence criteria to see if we stop.

```
      call stopping ( n, imx, jmx, igov, resid0, istop, convg,
     $       resid, nout, iskpout, cpustart, iskp, mg,
     $       fold(1,1,1), tf(1,1,1) )
```

Jump out of loop when converged.

```
      if ( istop .eq. .true. ) go to 100
```

End of the main loop for time evolution.

```
      end do

      idebugwrite = 0
      if ( idebugwrite .eq. 1 ) write (6,200)
 200  format (/ 'reached maximum number of iterations without ',
     $     'converging'/)

 100  continue
      if ( idebugwrite .eq. 1 ) write (6,201) n, iskp, resid
 201  format ( ' n = ', i5, ' iskp = ', i2, ' resid = ', e13.5 )

      return
      end
```

Load A

Form the peta-diagonal Left-Hand Side (LHS) implicit matrix. Stored in five diagonal vectors, $A_{i,j}$, $A_{i\pm1,j}$, and $A_{i,j\pm1}$. `loada` is called from `solvr`.

```
subroutine loada ( ieq, imx, jmx, dxfac, iskp, mg, tf )

include 'params.inc'
dimension tf(imax,jmax,5)

d1 = dxfac
d2 = dxfac**2
```

For the convective/diffusive equations for u, v, or ζ,

$$A_{i,j} = 1 + 2\sigma_x + 2\sigma_y$$

$$A_{i\pm1,j} = -\sigma_x \pm \lambda_x u, \quad A_{i,j\pm1} = -\sigma_y \pm \lambda_y v$$

```
if ( ieq .eq. 1 ) then
  do j = 1, jmx
    j1 = ( j - 1 ) * iskp + 1
    do i = 1, imx
      i1 = ( i - 1 ) * iskp + 1
      if ( mg .eq. 0 ) then
        u1 = tf(i,j,1)
        v1 = tf(i,j,2)
      else
        u1 = f(i1,j1,1)
        v1 = f(i1,j1,2)
      end if
      aij(i,j)= 1. + 2.*sig(i1,j1,1)*d2 + 2.*sig(i1,j1,2)*d2
      aip1(i,j) = -sig(i1,j1,1)*d2 + alam(i1,j1,1)*d1 * u1
      aim1(i,j) = -sig(i1,j1,1)*d2 - alam(i1,j1,1)*d1 * u1
      ajp1(i,j) = -sig(i1,j1,2)*d2 + alam(i1,j1,2)*d1 * v1
      ajm1(i,j) = -sig(i1,j1,2)*d2 - alam(i1,j1,2)*d1 * v1
    end do
  end do
```

For the Poisson equations for P or ψ,

$$A_{i,j} = \frac{2}{\Delta x^2} + \frac{2}{\Delta y^2}$$

$$A_{i\pm1,j} = -\frac{1}{\Delta x^2}, \quad A_{i,j\pm1} = -\frac{1}{\Delta y^2}$$

```
else if ( ieq .eq. 2 ) then
  do j = 1, jmx
```

```
      j1 = ( j - 1 ) * iskp + 1
      do i = 1, imx
        i1 = ( i - 1 ) * iskp + 1
        aij (i,j) =  2. * d2 / dx(i1,j1,1)**2 +
$            2.* d2 / dx(i1,j1,2)**2
        aip1(i,j) = -d2 / dx(i1,j1,1)**2
        aim1(i,j) = -d2 / dx(i1,j1,1)**2
        ajp1(i,j) = -d2 / dx(i1,j1,2)**2
        ajm1(i,j) = -d2 / dx(i1,j1,2)**2
      end do
    end do

  end if

  return
  end
```

Load b

Assign the Right-Hand Side (RHS) vector b for advancing $Af = b$ from time level n to level $n+1$. `loadb` is called by `solvr`.

```
      subroutine loadb ( mf, imx, jmx, iskp, dxfac, tf )

      include 'params.inc'

      dimension tf(imax,jmax,5)

      d1 = dxfac
      d2 = dxfac * dxfac
```

If solving for u,

$$b = u - \left(\frac{\Delta t}{\Delta x}\right) \frac{P_{i+1} - P_{i-1}}{2}$$

```
      if ( mf .eq. 1 ) then
        do j = 2, jmx - 1
          j1 = ( j - 1 ) * iskp + 1
          do i = 2, imx - 1
            i1 = ( i - 1 ) * iskp + 1
            b(i,j) = tf(i,j,mf) - alam(i1,j1,mf) * dxfac *
     $            ( tf(i+1,j,4) - tf(i-1,j,4) )
          end do
        end do
```

If solving for v,

$$b = v - \left(\frac{\Delta t}{\Delta y}\right) \frac{P_{j+1} - P_{j-1}}{2}$$

```
      else if ( mf .eq. 2 ) then
        do j = 2, jmx - 1
          j1 = ( j - 1 ) * iskp + 1
          do i = 2, imx - 1
            i1 = ( i - 1 ) * iskp + 1
            b(i,j) = tf(i,j,mf) - alam(i1,j1,mf) * dxfac *
     $            ( tf(i,j+1,4) - tf(i,j-1,4) )
          end do
        end do
```

If solving for ζ, $b = \zeta$.

```
      else if ( mf .eq. 3 ) then
        do j = 2, jmx - 1
          do i = 2, imx - 1
            b(i,j) = tf(i,j,mf)
          end do
        end do
```

If solving for P,

$$b = -\frac{C}{\Delta t} + \frac{(u_{i+1} - u_{i-1})^2}{4\Delta x^2} + \frac{(u_{j+1} - u_{j-1})(v_{i+1} - v_{i-1})}{2\Delta x\,\Delta y} + \frac{(v_{j+1} - v_{j-1})^2}{4\Delta y^2} -$$

$$\frac{1}{R_e}\left[\frac{C_{i+1} - 2C + C_{i-1}}{\Delta x^2} + \frac{C_{j+1} - 2C + C_{j-1}}{\Delta y^2}\right]$$

where,

$$C = \frac{u_{i+1} - u_{i-1}}{2\Delta x} + \frac{v_{j+1} - v_{j-1}}{2\Delta y}$$

```
      else if ( mf .eq. 4 ) then
        do j = 2, jmx - 1
          j1 = ( j - 1 ) * iskp + 1
          do i = 2, imx - 1
            i1 = ( i - 1 ) * iskp + 1
            b(i,j) = .25 * d2*( (tf(i+1,j,1) -
     $           tf(i-1,j,1))**2 / dx(i1,j1,1)**2
     $           + 2.*(tf(i,j+1,1) - tf(i,j-1,1)) * (tf(i+1,j,2)
     $           - tf(i-1,j,2)) / dx(i1,j1,1) / dx(i1,j1,2)
     $           + (tf(i,j+1,2) - tf(i,j-1,2))**2 /
     $           dx(i1,j1,2)**2 )
c           b(i,j) = .5 * (
c           $           ( f(i,j+1,1) - f(i,j-1,1) ) *
c           $           ( f(i+1,j,2) - f(i-1,j,2) ) -
c           $           ( f(i+1,j,1) - f(i-1,j,1) ) *
c           $           ( f(i,j+1,2) - f(i,j-1,2) ) )
c           $           / dx(i,j,1) / dx(i,j,2)
c           b(i,j) = .5 * ( f(i+1,j,1) - f(i-1,j,1) )**2 /
c           $           dx(i,j,1)**2 + .5 * ( f(i,j+1,1) - f(i,j-1,1) ) *
c           $           ( f(i+1,j,2) - f(i-1,j,2) ) / dx(i,j,1) / dx(i,j,2)
          end do
        end do
```

If solving for psi, $b = -\zeta$.

```
      else if ( mf .eq. 5 ) then
        do j = 2, jmx - 1
          do i = 2, imx - 1
            b(i,j) = - tf(i,j,3)
          end do
        end do

      else
        write (6,*) ' mf not .le. 5 in loadb, mf = ', mf
      end if
c
```

```
c     * diagnostic *
c     do i = 2, imx-1
c     do j = 2, jmx-1
c     write (6,*) ' b=',b(i,j),' for i=',i,' j=',j
c     end do
c     end do

      return
      end
```

Sgs

Symmetric Gauß-Seidel iteration module. Iterates on $Af = b$, sweeping first on increasing i nested inside increasing j, then sweeps again on decreasing j nested inside decreasing i. `niter` symmetric sweeps are performed. The variable/equation to be updated is designated by `mf`. `sgs` is called by `solvr` and `decp`.

```
      subroutine sgs ( mf, niter, imx, jmx, tf )

      include 'params.inc'
      dimension tf(imax,jmax,5)

      imx1 = imx - 1
      jmx1 = jmx - 1
```

How many symmetric sweeps to perform—`niter`.

```
      do k = 1, niter
```

Forward sweep—i and j increasing. Since A is penta-diagonal, the update formula is,

$$f_{i,j} = \frac{1}{a_{i,j}} \left(b_{i,j} - a_{i+1,j} f_{i+1,j} - a_{i-1,j} f_{i-1,j} - a_{i,j+1} f_{i,j+1} - a_{i,j-1} f_{i,j-1} \right)$$

```
        do j = 2, jmx1
          jp1 = j + 1
          jm1 = j - 1
          do i = 2, imx1
            ip1 = i + 1
            im1 = i - 1
            tf(i,j,mf) = ( b(i,j) - aip1(i,j) * tf(ip1,j,mf) -
$                aim1(i,j) * tf(im1,j,mf) - ajp1(i,j) * tf(i,jp1,mf)
$                - ajm1(i,j) * tf(i,jm1,mf) ) / aij(i,j)
          end do
        end do
```

Backward sweep—i and j decreasing.

```
        do i = imx1, 2, -1
          ip1 = i + 1
          im1 = i - 1
          do j = jmx1, 2, -1
            jp1 = j + 1
            jm1 = j - 1
            tf(i,j,mf) = ( b(i,j) - aip1(i,j) * tf(ip1,j,mf) -
$                aim1(i,j) * tf(im1,j,mf) - ajp1(i,j) * tf(i,jp1,mf)
$                - ajm1(i,j) * tf(i,jm1,mf) ) / aij(i,j)
```

```
    end do
  end do

end do

return
end
```

Boundary Conditions

Explicitly update the boundary points. All boundaries are solid, no-slip walls.
Upper boundary translates at speed `ubig`. `bc` is called by `solvr`.

```
      subroutine bc ( ieq, imx, jmx, ubig, re, iskp, dxfac, tf )

      include 'params.inc'
      dimension tf(imax,jmax,5)

      d2 = dxfac * dxfac
```

i = 1, left wall

```
      i = 1
      i1 = ( i - 1 ) * iskp + 1
      do j = 2, jmx-1
        j1 = ( j - 1 ) * iskp + 1
c        if ( ieq .eq. 1 ) then     !  primitive variables formulation
```

$u = v = 0$

```
          tf(i,j,1) = 0.
          tf(i,j,2) = 0.
```

Several options for pressure are:

$$P_{wall} = P_{wall+1}$$

$$P_{wall} = \frac{4}{3}P_{wall+1} - \frac{1}{3}P_{wall+2}$$

$$P_{wall} = \frac{1}{3}\left(4P_{wall+1} - P_{wall+2} + \frac{4P_{wall+1} - 2P_{wall+2}}{R_e \Delta x} + 2P_{wall+1}^2\right)$$

$$P_{wall} = P_{wall+1} + \frac{2P_{wall+1} - P_{wall+2}}{R_e \Delta x} + P_{wall+1}^2$$

```
          tf(i,j,4) = tf(i+1,j,4)
c         f(i,j,4) = 4. / 3. * f(i+1,j,4) - f(i+2,j,4) / 3.
c         f(i,j,4) = ( 4. * f(i+1,j,4) - f(i+2,j,4) +
c         $          ( 4. * f(i+1,j,1) - 2. * f(i+2,j,1) )
c         $          / re / dx(i,j,1) + 2. * f(i+1,j,1)**2 ) / 3.
c         f(i,j,4) = f(i+1,j,4) + ( 2. * f(i+1,j,1) - f(i+2,j,1) )
c         $          / re / dx(i,j,1) + f(i+1,j,1)**2
c
c        else                       !  vorticity/stream function formulation
```

Options for ψ and ζ are:

$$\psi_{wall} = 0$$

$$\psi_{wall} = \psi_{wall+1}$$

$$\psi_{wall} = \frac{4}{3}\psi_{wall+1} - \frac{1}{3}\psi_{wall+2}$$

$$\zeta_{wall} = \frac{2\psi_{wall+1}}{\Delta x^2}$$

$$\zeta_{wall} = \frac{1}{\Delta x^2}\left(\psi_{wall} - 2\psi_{wall+1} + \psi_{wall+2}\right)$$

```
          tf(i,j,5) = 0.
c         f(i,j,5) = 4. / 3. * f(i+1,j,5) - f(i+2,j,5) / 3.
c         f(i,j,5) = f(i+1,j,5)

          tf(i,j,3) = 2. * d2 * tf(i+1,j,5) / dx(i1,j1,1)**2
c         f(i,j,3) = ( f(i,j,5) - 2. * f(i+1,j,5) + f(i+2,j,5) ) /
c         $         dx(i,j,1)**2
c        end if
      end do
```

i = imx, right wall

```
      i = imx
      i1 = ( i - 1 ) * iskp + 1
      do j = 2, jmx-1
        j1 = ( j - 1 ) * iskp + 1
c        if ( ieq .eq. 1 ) then
          tf(i,j,1) = 0.
          tf(i,j,2) = 0.
c         f(i,j,4) = 4. / 3. * f(i-1,j,4) - f(i-2,j,4) / 3.
c         f(i,j,4) = f(i-1,j,4) - ( 2. * f(i-1,j,1) - f(i-2,j,1) )
c         $         / re / dx(i,j,1) + f(i-1,j,1)**2
          tf(i,j,4) = tf(i-1,j,4)
c        else
c         f(i,j,5) = 4. / 3. * f(i-1,j,5) - f(i-2,j,5) / 3.
c         f(i,j,5) = f(i-1,j,5)
          tf(i,j,5) = 0.
c         f(i,j,3) = ( f(i,j,5) - 2. * f(i-1,j,5) + f(i-2,j,5) ) /
c         $         dx(i,j,1)**2
          tf(i,j,3) = 2. * d2 * tf(i-1,j,5) / dx(i1,j1,1)**2
c        end if
      end do
```

j = 1, bottom

```
      j = 1
      j1 = ( j - 1 ) * iskp + 1
      do i = 2, imx-1
        i1 = ( i - 1 ) * iskp + 1
```

```
c        if ( ieq .eq. 1 ) then
          tf(i,j,1) = 0.
          tf(i,j,2) = 0.
c         f(i,j,4) = 4. / 3. * f(i,j+1,4) - f(i,j+2,4) / 3.
c         f(i,j,4) = f(i,j+1,4) + ( 2. * f(i,j+1,2) - f(i,j+2,2) )
c         $         / re / dx(i,j,2) + f(i,j+1,2)**2
          tf(i,j,4) = tf(i,j+1,4)
c        else
c         f(i,j,5) = 4. / 3. * f(i,j+1,5) - f(i,j+2,5) / 3.
c         f(i,j,5) = f(i,j+1,5)
          tf(i,j,5) = 0.
c         f(i,j,3) = ( f(i,j,5) - 2. * f(i,j+1,5) + f(i,j+2,5) ) /
c         $         dx(i,j,2)**2
          tf(i,j,3) = 2. * d2 * tf(i,j+1,5) / dx(i1,j1,2)**2
c        end if
      end do
```

j = jmx, top

```
      j = jmx
      j1 = ( j - 1 ) * iskp + 1
      do i = 2, imx-1
        i1 = ( i - 1 ) * iskp + 1
c        if ( ieq .eq. 1 ) then
```

Same options for v and P. $u = U$ (`ubig`).

$$\psi_{wall} = 0 \;\; or, \;\; \psi_{wall} = \frac{1}{3}\left(4\psi_{wall-1} - \psi_{wall-2} + 2\Delta y U\right)$$

$$\zeta_{wall} = \frac{2}{\Delta y^2}\left(\psi_{wall-1} + \Delta y U\right) \;\; or, \;\; \zeta_{wall} = \frac{1}{\Delta y^2}\left(\psi_{wall} - 2\psi_{wall-1} + \psi_{wall-2}\right)$$

```
          tf(i,j,1) = ubig
          tf(i,j,2) = 0.
c         f(i,j,4) = 4. / 3. * f(i,j-1,4) - f(i,j-2,4) / 3.
c         f(i,j,4) = f(i,j-1,4) - ( 2. * f(i,j-1,2) - f(i,j-2,2) )
c         $         / re / dx(i,j,2) + f(i,j-1,2)**2
          tf(i,j,4) = tf(i,j-1,4)
c        else
c         f(i,j,5) = ( 4. * f(i,j-1,5) - f(i,j-2,5) +
c         $         2. * ubig * dx(i,j,2) ) / 3.
          tf(i,j,5) = 0.
c         f(i,j,3) = ( f(i,j,5) - 2. * f(i,j-1,5) + f(i,j-2,5) ) /
c         $         dx(i,j,2)**2
          tf(i,j,3) = 2. * d2 * ( tf(i,j-1,5) +
     $         ubig * dx(i1,j1,2) / dxfac ) / dx(i1,j1,2)**2
c        end if
      end do
```

just set the corner points to a neighboring point

```
do k = 1, 5
  tf(1,1,k) = tf(2,1,k)
  tf(imx,1,k) = tf(imx-1,1,k)
  tf(1,jmx,k) = tf(2,jmx,k)
  tf(imx,jmx,k) = tf(imx-1,jmx,k)
end do

return
end
```

Decp

Decode the pressure from the stream-function and vorticity. Relies on the fact that the velocities have already been decoded in `solvr`. The Poisson equation for the steady-state pressure,

$$\nabla^2 P = 2\left(u_x v_y - u_y v_x\right)$$

is relaxed using symmetric Gauß-Seidel sweeps.

Called from `cavity`. Calls `sgs`.

```
      subroutine decp ( imx, jmx, iskp, tf )
      include 'params.inc'
      dimension tf( imax, jmax, 5 )
```

Build pentadiagonal LHS and forcing function RHS at interior points. Multiply through by grid spacing for convenience, giving,

$$\Delta x^2 \Delta y^2 \nabla P = 2\Delta x^2 \Delta y^2 \left(u_x v_y - u_y v_x\right)$$

```
      do i = 2, imx - 1
        i1 = ( i - 1 ) * iskp + 1
        do j = 2, jmx - 1
          j1 = ( j - 1 ) * iskp + 1
```

Construct LHS with two-dimensional, second-order central differences,

$$\Delta x^2 \Delta y^2 \nabla^2 P_{i,j} \rightarrow \Delta y^2 (P_{i+1} + P_{i-1}) + \Delta x^2 (P_{j+1} + P_{j-1}) - 2(\Delta x^2 + \Delta y^2) P_{i,j}$$

```
          aij(i,j) = -2. * ( dx(i1,j1,1)**2 + dx(i1,j1,2)**2 )
          aip1(i,j) = dx(i1,j1,2)**2
          aim1(i,j) = dx(i1,j1,2)**2
          ajp1(i,j) = dx(i1,j1,1)**2
          ajm1(i,j) = dx(i1,j1,1)**2
```

Construct the RHS vector using second-order central differences,

$$2\Delta x^2 \Delta y^2 \left(u_x v_y - u_y v_x\right) \rightarrow$$

$$\frac{\Delta x \Delta y}{2}\left[(u_{i+1} - u_{i-1})(v_{j+1} - v_{j-1}) - (u_{j+1} - u_{j-1})(v_{i+1} - v_{i-1})\right]$$

```
          ux = f(i+1,j,1) - f(i-1,j,1)
          uy = f(i,j+1,1) - f(i,j-1,1)
          vx = f(i+1,j,2) - f(i-1,j,2)
          vy = f(i,j+1,2) - f(i,j-1,2)
          b(i,j) = .5 * dx(i1,j1,1) * dx(i1,j1,2) *
     $          ( ux * vy - uy * vx )
        end do
      end do
```

Finally iteratively solve for the pressure using Gauß-Seidel sweeps.

```
call sgs ( 4, 1, imx, jmx, tf(1,1,1) )
return
end
```

Stopping

Check to see if convergence criteria has been met. Also outputs convergence and timing history. Called by `solvr`.

```
      subroutine stopping ( n, imx, jmx, igov, resid0, istop,
     $     convg, resid, nout, iskpout, cpustart, iskp, mg,
     $     fold, tf )

      include 'params.inc'
      dimension fold(imax,jmax,5), tf(imax,jmax,5)
      logical istop
```

Compute L_2 residual of all variables at all points.

```
      resid = 0.
      do j = 1, jmx
        do i = 1, imx
c         primitive variables
          if ( igov .eq. 1 ) then
            resid = resid + ( tf(i,j,1) - fold(i,j,1) )**2
            resid = resid + ( tf(i,j,2) - fold(i,j,2) )**2
            resid = resid + ( tf(i,j,4) - fold(i,j,4) )**2
          else
c           stream-function/vorticity
            resid = resid + ( tf(i,j,3) - fold(i,j,3) )**2
            resid = resid + ( tf(i,j,5) - fold(i,j,5) )**2
          end if
        end do
      end do
      resid = sqrt( resid )
```

Initialize starting residual if first iteration.

```
      if ( resid0 .lt. 0. ) then
        resid0 = resid
        write (45) 1, etime(a1,a2)-cpustart, 1.
        write (6,*) ' resid0 = ', resid0
        nout = 1
      end if
```

Normalize the residual by the starting residual.

```
      resid = resid / resid0
```

Check for convergence if on fine mesh.

```
      if ( iskp .eq. 1 .and. abs(resid) .lt. convg ) then
        istop = .true.
        write (6,*) ' ***  Solution Converged  ***'
      end if
```

Save convergence history if on fine mesh.

```
      if ( ( mod( ntot, iskpout ) .eq. 0
     $     .or. istop .eq. .true. ) .and. mg .eq. 0 )then
        cpu1 = etime( atime1, atime2 ) - cpustart
        write(45) ntot, cpu1, resid
        write (6,110) ntot, iskp, cpu1, resid
 110    format ( 'iter = ', i5, ', iskp = ', i2,', cput = ',
     $       f7.1, 's,', ' resid = ', e12.6 )
        nout = nout + 1
      end if

      return
      end
```

Restrict

Restrict a fine-mesh vector to a coarse mesh by simple injection of the overlapping points. `vbig` is the vector to be restricted, defined on the fine grid. `vsmal` is the resultant vector, defined on the coarse grid. `ix` and `jx` are dimensions of `vsmal`. Called from `cavity` and `multig`.

```
subroutine restrict ( ix, jx, vbig, vsmal )

include 'params.inc'
dimension vbig(imax,jmax,5), vsmal(imax,jmax,5)

do k = 1, 5
  do j = 1, jx
    j2 = 2 * j - 1
    do i = 1, ix
      i2 = 2 * i - 1
      vsmal(i,j,k) = vbig(i2,j2,k)
    end do
  end do
end do

return
end
```

Prolong

A linear-averaging prolongation of a vector from a coarse grid to a fine grid. `vsmal` is the vector to prolongate, defined on the coarse grid. `vbig` is the result of the prolongation, defined on the fine grid. `ix` and `jx` are dimensions of `vsmal`. Called by `cavity` and `multig`.

```
subroutine prolong ( ix, jx, vbig, vsmal )

include 'params.inc'
dimension vbig(imax,jmax,5), vsmal(imax,jmax,5)

do k = 1, 5
```

Simple injection for the overlapping points.

```
  do j = 1, jx
    j2 = 2 * j - 1
    do i = 1, ix
      i2 = 2 * i - 1
      vbig(i2,j2,k) = vsmal(i,j,k)
    end do
  end do
```

Two-point averaging in i for the new fine-grid points along a $j = const$ line of the coarse grid.

```
  do j = 1, jx
    j2 = 2 * j - 1
    do i = 1, ix-1
      i2 = 2 * i
      vbig(i2,j2,k) = .5 * ( vsmal(i,j,k) + vsmal(i+1,j,k) )
    end do
  end do
```

Two-point averaging in j for the new fine-grid points along a $i = const$ line of the coarse grid.

```
  do i = 1, ix
    i2 = 2 * i - 1
    do j = 1, jx-1
      j2 = 2 * j
      vbig(i2,j2,k) = .5 * ( vsmal(i,j,k) + vsmal(i,j+1,k) )
    end do
  end do
```

Four-point averaging for remaining fine-grid points, corresponding to $i \pm \frac{1}{2},\ j \pm \frac{1}{2}$ on the coarse grid.

```
      do j = 1, jx - 1
        j2 = 2 * j
        do i = 1, ix - 1
          i2 = 2 * i
          vbig(i2,j2,k) = .25 * ( vsmal(i,j,k) + vsmal(i+1,j,k) +
     $          vsmal(i,j+1,k) + vsmal(i+1,j+1,k) )
        end do
      end do

    end do

    return
    end
```

Multig

V-cycle multigrid driver. Called from `cavity`. Calls `solvr`, `restrict`, and `prolong`.

```
      subroutine multig

      include 'params.inc'
      logical istop

      common / parms / alength, alammax, sigmax, re, height, ubig,
     $     igov, nitsgs, niterp, convg, iskpout, img, istop,
     $     igrid, beta
      common / parm2 / cpustart, dxfin, dxmed, dxcor, iskpfin,
     $     iskpmed, iskpcor, resid0, nout
```

Begin main loop of V-cycle. Perform `niterp` cycles.

```
      do nn = 1, niterp
```

Relax solution on fine-mesh. First argument is the number of smoothing iterations to perform.

```
        call solvr ( 3, 0, imax, jmax, igov, dxfin, iskpfin,
     $       nitsgs, re, ubig, resid0, istop, convg, nout,
     $       iskpout, cpustart, f(1,1,1) )
```

Are we converged on the fine mesh?

```
        if ( istop .eq. .true. ) go to 200
```

Restrict residual from fine mesh to medium mesh.

```
        call restrict(imxmed,jmxmed,res(1,1,1,1),res(1,1,1,2))
        do k = 1, 5
          do j = 1, jmxmed
            do i = 1, imxmed
              res(i,j,k,1) = res(i,j,k,2)
              fmed(i,j,k) = 0.   !  zero out error on medium mesh
            end do
          end do
        end do
```

Smooth error on medium mesh. Again, the first argument is the number of smoothing iterations to perform.

```
        call solvr ( 2, 1, imxmed, jmxmed, igov, dxmed, iskpmed,
     $       nitsgs, re, ubig, resid0, istop, convg, nout,
     $       iskpout, cpustart, fmed(1,1,1) )
```

Restrict residual from medium to coarse mesh.

```
      call restrict(imxcor,jmxcor,res(1,1,1,3),res(1,1,1,1))
      do k = 1, 5
        do j = 1, jmxcor
          do i = 1, imxcor
            fcor(i,j,k) = 0.
          end do
        end do
      end do
```

Smooth error on coarse mesh.

```
      call solvr ( 1, 1, imxcor, jmxcor, igov, dxcor, iskpcor,
     $       nitsgs, re, ubig, resid0, istop, convg, nout,
     $       iskpout, cpustart, fcor(1,1,1) )
```

Prolong coarse-mesh error to medium mesh.

```
      call prolong (imxcor, jmxcor, res(1,1,1,3), fcor(1,1,1))
```

Correct medium-mesh error with contribution from coarse mesh.

```
      do k = 1, 5
        do j = 2, jmxmed-1
          do i = 2, imxmed-1
            fmed(i,j,k) = fmed(i,j,k) + res(i,j,k,3)
          end do
        end do
      end do
```

Smooth medium-mesh error again.

```
      call solvr ( 2, 2, imxmed, jmxmed, igov, dxmed, iskpmed,
     $       nitsgs, re, ubig, resid0, istop, convg, nout,
     $       iskpout, cpustart, fmed(1,1,1) )
```

Prolong medium-mesh error to fine mesh.

```
      call prolong (imxmed, jmxmed, res(1,1,1,1), fmed(1,1,1))
```

Update fine-mesh solution with correction to residual from medium mesh.

```
      do k = 1, 5
        do j = 2, jmax-1
          do i = 2, imax-1
            f(i,j,k) = f(i,j,k) + res(i,j,k,1)
          end do
        end do
      end do
```

Smooth fine-mesh solution again.

```
        call solvr ( 3, 0, imax, jmax, igov, dxfin, iskpfin,
     $       nitsgs, re, ubig, resid0, istop, convg, nout,
     $       iskpout, cpustart, f(1,1,1) )
```

Now loop back to repeat V-cycle.

```
      end do
 200  continue

      return
      end
```

Outsol

Solution-output routine, called from `cavity`. Solution is written to `cavity_tec.dat` in TECPLOT[2] format for variables: x, y, Δx, Δy, u, v, ζ, P, ψ, $u_x + v_y$.

Also outputs plot file of convergence history to `cavity_convg.dat`.

```
      subroutine outsol ( imx, jmx, nout )

      include 'params.inc'
      dimension deriv(imax,jmax,2)
```

Compute derivatives of velocities to verify continuity equation. Central difference interior points, one-sided differences on boundaries. Should get $u_x + v_y = 0$.

u_x

```
      do j = 1, jmx
        deriv(1,j,1) = ( f(2,j,1) - f(1,j,1) ) / dx(1,j,1)
        do i = 2, imx-1
          deriv(i,j,1) = .5 * ( f(i+1,j,1) - f(i-1,j,1) )
     $          / dx(i,j,1)
        end do
        deriv(imx,j,1) = ( f(imx,j,1) - f(imx-1,j,1) )
     $        / dx(imx,j,1)
      end do
```

v_y

```
      do i = 1, imx
        deriv(i,1,2) = ( f(i,2,2) - f(i,1,2) ) / dx(i,1,2)
        do j = 2, jmx-1
          deriv(i,j,2) = .5 * ( f(i,j+1,2) - f(i,j-1,2) )
     $          / dx(i,j,2)
        end do
        deriv(i,jmx,2) = ( f(i,jmx,2) - f(i,jmx-1,2) )
     $        / dx(i,jmx,2)
      end do
```

Tecplot-format grid and solution file.

```
      open ( 15, file = 'cavity_tec.dat', form = 'formatted' )
      write ( 15, 100 ) imx, jmx
 100  format ( 'TITLE = "flowsol"' /
     $     'VARIABLES = "X", "Y", "dx", "dy"'/
     $     '"u", "v", "zeta",' /
     $     '"P", "psi", "cont"' /
     $     'ZONE I=', i3, ', J=', i3, ', F=BLOCK' )

      write ( 15, * ) ((( x(i,j,k), i=1,imx), j=1,jmx), k=1,2)
      write ( 15, * ) ((( dx(i,j,k), i=1,imx), j=1,jmx), k=1,2)
```

```
      write ( 15, * ) ((( f(i,j,k), i=1,imx), j=1,jmx), k=1,5)
      write ( 15, * ) ((( deriv(i,j,1) + deriv(i,j,2) ),
     $     i=1,imx), j=1,jmx)
```

Tecplot-format convergence history.

```
      open ( 16, file = 'cavity_convg.dat', form = 'formatted' )
      write ( 16, 101 ) nout
 101  format ( 'TITLE = "Convergence"' /
     $     'VARIABLES = "iter", "CPU", "R-L_2"' /
     $     'ZONE I=', i5, ', J=1, F=point' )

      rewind (45)
      do n = 1, nout
        read (45) i, cpu, resid
        write (16,*) i, cpu, resid
      end do

      return
      end
```

Results

Incompressible Navier-Stokes solutions were computed inside a unit cavity, with the upper surface translating to the right. Three Reynolds numbers (R_e) were considered, 100, 400, and 2000. In all cases uniform meshes were employed, with the same spacing in both x and y directions.

Convergence times for six cases, corresponding to a coarse and fine mesh convergence study at each of the three Reynolds numbers, are tabulated in Table 1. Solution times are seen to increase with increasing R_e, and to increase by an order of magnitude with a quadrupling of the grid density. Solution times reported are for an SGI 195 MHz R10000 CPU. Each case was started from a stationary initial condition, using three-level mesh sequencing and multigrid smoothing to accelerate convergence.

R_e	J	CPU sec.	L_2	Resolution
100	51	13	10^{-6}	± 0.01
100	101	121	10^{-6}	± 0.005
400	101	168	10^{-6}	± 0.005
400	126	224	10^{-6}	± 0.004
2000	125	707	2×10^{-5}	± 0.004
2000	249	4039	5×10^{-5}	± 0.002

Table 1: Cases on unit square with $J \times J$ mesh.

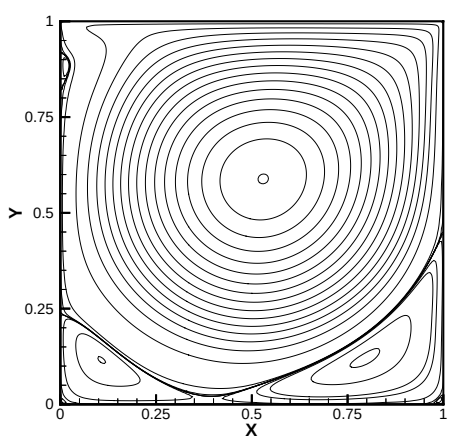

Figure 1: Stream-function contours at $R_e = 2000,\ 201 \times 201$ mesh.

	Ghia	Schreiber	Present (coarse)	Present (fine)
x_0	0.617	0.617	0.62	0.615
y_0	0.734	0.742	0.74	0.740
ψ_0	-0.103	-0.103	-0.102	-0.103
ζ_0	3.17	3.18	3.18	3.20
x_1	0.031	0.033	0.03	0.035
y_1	0.039	0.025	0.03	0.035
ψ_1 $(\times 10^6)$	1.74	2.05	3.22	2.09
ζ_1	-0.0255	-0.0080	-0.0231	-0.0153
L_1	0.078	—	0.09	0.085
H_1	0.078	—	0.09	0.085
x_2	0.945	0.942	0.94	0.940
y_2	0.063	0.050	0.06	0.060
ψ_2 $(\times 10^5)$	1.25	1.32	1.59	1.33
ζ_2	-0.0331	-0.0255	-0.0356	-0.0359
L_2	0.133	—	0.13	0.135
H_2	0.148	—	0.15	0.155

Table 2: Vortex locations, stream-function, and vorticity for $R_e = 100$.

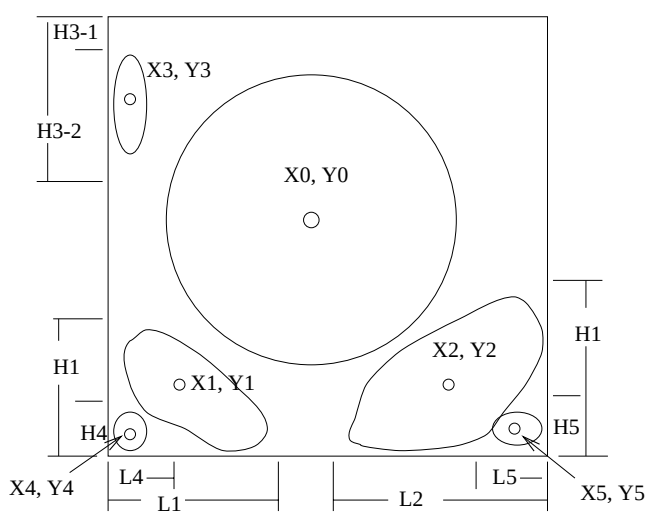

Figure 2: Vortex center and separation point naming conventions.

At $R_e = 2000$, six vorticies are predicted, seen in Figure 1. In addition to the primary vortex, there are three secondary vortices in the lower corners and upper-left side. The two remaining tertiary vortices are located in the extreme lower corners. Figure 2 is a cartoon sketch identifying the nomenclature for describing the vortices and their strengths.

Numerical data from the six cases in Table 1 in the form of vortex locations, stream-function and vorticity strengths, and separation points are compared with the results of Ghia *et al*[3] and Schreiber and Keller[4] in Tables 2 and 3. Excellent agreement is seen for $R_e = 100$, Table 2, between the present method and the other sources. At this Reynolds number only three vortices are present.

Table 3 contains the data for $R_e = 400$. Schreiber reports data for only three vortices at this Reynolds number, though the present method resolved four and Ghia reports five vortices. Again, excellent agreement is seen between the data sets. Table 4 lists the results of the grid-convergence study at $R_e = 2000$, where all six vortices appear.

Summary

An annotated source code for the solution of incompressible viscous flow in a two-dimensional cavity is presented. The Navier-Stokes equations are cast in a stream-function/vorticity formulation with second-order spatial accuracy. Convergence to a steady state is accelerated *via* multigrid relaxation.

Solutions are obtained for Reynolds numbers of 100, 400, and 2000. Solution accuracy is checked *versus* previously published numerical results. Excellent agreement is seen in the location of vortex centers, separation points, vorticity strengths, and stream-function values amongst the data sets.

The present code is seen to be an accurate and efficient means for solving the incompressible viscous driven cavity problem.

References

[1] Wood, W. A., "Multigrid Approach to Incompressible Viscous Cavity Flows," NASA TM 110262, May 1996.

[2] Amtec Engineering, Inc., Bellevue, Washington, *Tecplot User's Manual: Version 7*, Aug. 1996.

[3] Ghia, U., Ghia, K. N., and Shin, C. T., "High-Re Solutions for Incompressible Flow Using the Navier-Stokes Equations and a Multigrid Method," *Journal of Computational Physics*, Vol. 48, Oct. 1982, pp. 387–411.

[4] Schreiber, R. and Keller, H. B., "Driven Cavity Flows by Efficient Numerical Techniques," *Journal of Computational Physics*, Vol. 49, 1983, pp. 310–333.

	Ghia	Schreiber	Present (coarse)	Present (fine)
x_0	0.555	0.557	0.555	0.556
y_0	0.606	0.607	0.610	0.608
ψ_0	-0.114	-0.113	-0.112	-0.113
ζ_0	2.29	2.28	2.27	2.29
x_1	0.051	0.050	0.050	0.052
y_1	0.047	0.043	0.045	0.048
ψ_1 ($\times 10^5$)	1.42	1.45	1.47	1.49
ζ_1	-0.0570	-0.0471	-0.0600	-0.0534
L_1	0.127	—	0.125	0.128
H_1	0.108	—	0.100	0.108
x_2	0.891	0.886	0.885	0.884
y_2	0.125	0.114	0.125	0.124
ψ_2 ($\times 10^4$)	6.62	6.44	6.43	6.45
ζ_2	-0.434	-0.394	-0.449	-0.455
L_2	0.262	—	0.265	0.264
H_2	0.320	—	0.320	0.324
x_4	0.004	—	—	—
y_4	0.004	—	—	—
ψ_4 ($\times 10^{10}$)	-7.67	—	—	—
ζ_4	0.0009	—	—	—
L_4	0.004	—	—	—
H_4	0.004	—	—	—
x_5	0.992	—	0.990	0.992
y_5	0.008	—	0.010	0.008
ψ_5 ($\times 10^8$)	-1.86	—	-10.0	-7.76
ζ_5	0.0044	—	0.0092	0.0052
L_5	0.016	—	0.015	0.016
H_5	0.016	—	0.015	0.016

Table 3: Vortex locations, stream-function, and vorticity for $R_e = 400$.

	Present (coarse)	Present (fine)
x_0	0.524	0.522
y_0	0.548	0.556
ψ_0	-0.120	-0.134
ζ_0	2.17	2.57
x_1	0.089	0.087
y_1	0.097	0.096
ψ_1 $(\times 10^5)$	66.6	51.5
ζ_1	-0.679	-0.615
L_1	0.274	0.270
H_1	0.214	0.207
x_2	0.843	0.833
y_2	0.099	0.102
ψ_2 $(\times 10^4)$	24.3	24.7
ζ_2	-1.67	-1.65
L_2	0.338	0.360
H_2	0.395	0.403
x_3	0.033	0.032
y_3	0.884	0.884
ψ_3 $(\times 10^4)$	1.47	1.50
ζ_3	-0.806	-0.943
H_3^1	0.073	0.073
H_3^2	0.226	0.224
x_4	0.008	0.006
y_4	0.008	0.006
ψ_4 $(\times 10^8)$	-10.8	-2.83
ζ_4	0.0153	0.0056
L_4	0.012	0.012
H_4	0.012	0.012
x_5	0.992	0.991
y_5	0.008	0.009
ψ_5 $(\times 10^8)$	-25.6	-11.5
ζ_5 $(\times 10^3)$	9.89	7.37
L_5	0.024	0.022
H_5	0.024	0.022

Table 4: Vortex locations, stream-function, and vorticity for $R_e = 2000$.