AIAA 2000-0780

An Efficient Inverse Aerodynamic Design Method For Subsonic Flows

William E. Milholen II
NASA Langley Research Center
Hampton, VA

38th Aerospace Sciences
Meeting & Exhibit
10-13 January 2000 / Reno, NV

An Efficient Inverse Aerodynamic Design Method For Subsonic Flows

William E. Milholen II *
NASA Langley Research Center
Hampton, VA

Abstract

Computational Fluid Dynamics based design methods are maturing to the point that they are beginning to be used in the aircraft design process. Many design methods however have demonstrated deficiencies in the leading edge region of airfoil sections. The objective of the present research is to develop an efficient inverse design method which is valid in the leading edge region. The new design method is a streamline curvature method, and a new technique is presented for modeling the variation of the streamline curvature normal to the surface. The new design method allows the surface coordinates to move normal to the surface, and has been incorporated into the Constrained Direct Iterative Surface Curvature (CDISC) design method. The accuracy and efficiency of the design method is demonstrated using both two-dimensional and three-dimensional design cases.

Nomenclature

b	wing span
c	airfoil or wing local chord
C	curvature
C_p	surface static pressure coefficient
M	Mach number
Re	Reynolds number based on chord
s	arclength
V	velocity tangent to streamline
x, y, z	Cartesian coordinates
y^+	incompressible law-of-the-wall coordinate
α	angle-of-attack, degrees
η	direction normal to surface
σ	scaling coefficient

Subscripts

L	lower surface
U	upper surface
$\circ$	surface value
∞	free stream value

Superscripts

*	sonic value

Introduction

Computational Fluid Dynamics (CFD) methods have matured to the point that they are being used to analyze full aircraft configurations [1], as well as to develop experimental testing techniques [2]. One area of particular interest to the aircraft industry is the use of state-of-the-art CFD methods in the design process. This interest has led to the development of many efficient design methods which can be directly coupled with Navier-Stokes solvers. The CFD based design methods must be efficient and accurately model relevant flow physics. One such example is the Constrained Direct Iterative Surface Curvature (CDISC) method developed at the NASA Langley Research Center [3].

*Research Engineer, Member AIAA.

The CDISC design method uses analytically derived pressure/geometry relationships to modify a given surface geometry to match a prescribed target pressure distribution. The method is valid for subsonic, transonic, and supersonic flow regimes. The target pressure distribution can be specified by a designer based on their own interests. For example, the target pressure distribution may be specified to give a favorable pressure gradient over a portion of an airfoil [4,5]. The CDISC method also offers many geometric constraints which can be imposed during a design study. A complete description of the method can be found in Reference 3.

Design methods such as CDISC have traditionally been used to improve the cruise performance of a configuration. As these design methods have matured, interest has grown in applying such design methods to improve the configuration in other important flight regimes. One area of significant interest is the design and optimization of high-lift systems deployed during takeoff and landing [6]. For such design cases, surface geometry modifications are generally limited to small regions, such as the leading edge region of a flap element. Thus a design method must work well in leading edge regions before it can be applied to such challenging design tasks.

Many design methods including CDISC have demonstrated some deficiencies in the leading edge region [5,6]. This is not surprising given the strong flow gradients and high surface curvature in this region. Several approaches have been developed to improve the leading edge region, which include representing the surface geometry using families of smooth analytic functions [6,7]. Such techniques can be useful, but their use can raise concern of biasing a design by restricting it to fit within a certain geometric family.

The objective of the present research is to develop a design method which performs well in the leading edge region at subsonic speeds. The method is based upon the same streamline curvature principles as the CDISC design method, however a new method is presented for modeling the variation of the streamline curvature normal to the surface. The new design method allows the surface coordinates to move *normal* to the surface. The new design method, SC2D, has been incorporated into the CDISC design method. Several two-dimensional and three-dimensional design cases are presented which demonstrate the efficiency and accuracy of the SC2D design method. The new design method will be shown to perform quite well in the leading edge region.

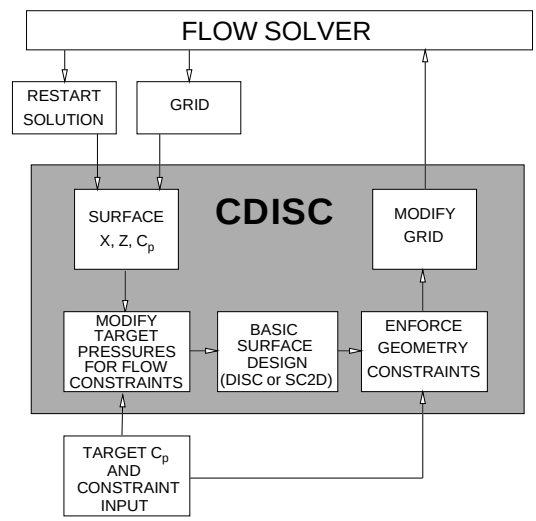

Figure 1. Flowchart for the CDISC design method.

CDISC Design Method

A flowchart for the CDISC design method is shown in Figure 1. The CDISC module is indirectly coupled to a flow solver using a script file. After a prescribed number of flow solver iterations the current grid and solution restart files are passed to the CDISC module. The surface geometry and pressure distributions are first extracted from the grid and restart files. The target pressures are modified to meet any prescribed flow constraints, then passed to the basic surface design module. This is where the new SC2D design method has been added, which will be discussed in detail below. After the basic surface design is complete, the geometry

is modified to meet any geometry constraints. The volume grid is then updated and returned to the flow solver for analysis. This process is defined as a design cycle. This procedure continues through several design cycles until the design is within acceptable agreement with the specified targets.

SC2D Design Method

The new design algorithm is based upon the same streamline curvature relationship used by Barger and Brooks [8], and more recently used by Campbell [3]. The relationship is derived from the momentum equations written in a streamline coordinate system;

$$\frac{dV}{V} = -C(\eta)d\eta \tag{1}$$

where V is the velocity tangent to the streamline, C is the streamline curvature, and η is the direction normal to the streamline. Before equation (1) can be used to develop a design algorithm, the variation of curvature normal to the streamline must be formulated. Barger and Brooks [8] assumed that the streamline curvature decays exponentially into the free stream;

$$C(\eta) = C_\circ e^{-k\eta} \tag{2}$$

where $C_\circ$ is the curvature at the airfoil surface, and k is a constant. Downstream of an airfoil leading edge this appears to be a reasonable assumption, and has been used successfully for designing transonic airfoils and wings [4]. In the leading edge region however, Barger and Brooks noted that this expression may not be valid. In this region the streamline curvature along a normal to the surface may change sign, particularly near the stagnation point. Equation (2) does not account for a change in the sign of the streamline curvature. As a result, a design method based on equation (2) may become problematic in the leading edge region [5].

In the present research a new approach is presented for modeling the variation of the streamline curvature normal to the surface. For an iterative design procedure, it is only necessary to consider the variation of the streamline curvature *near* the surface. Figure 2 shows a streamline pattern near the surface of a two-dimensional body. Moving away from the surface a small distance, the streamline curvature is nearly equal to the surface curvature. The streamline curvature is thus assumed to vary in

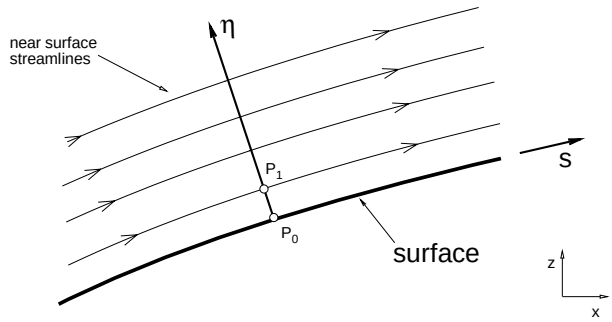

Figure 2. Near surface streamline pattern.

a linear manner near the surface;

$$C(\eta) = C_\circ + d\eta \tag{3}$$

where d is a constant. This form is valid in the leading edge region, and does allow for a change in the sign of the streamline curvature. This expression is substituted into equation (1), and integrated from the surface ($\eta = 0$) to the point P_1 near the surface ($\eta = \eta_1$). This gives;

$$\ln\left(\frac{V_1}{V_\circ}\right) = -\left(C_\circ\eta_1 + \frac{d}{2}{\eta_1}^2\right) \tag{4}$$

where $V_\circ$ is the *inviscid* surface velocity. Since the point P_1 is a small distance from the surface, small perturbations can be used;

$$\begin{aligned} V_1 &= V_\circ + \Delta V \\ \eta_1 &= \eta_\circ + \Delta\eta \end{aligned} \tag{5}$$

which are used to give:

$$\ln\left(1 + \frac{\Delta V}{V_\circ}\right) = -\left(C_\circ\Delta\eta + \frac{d}{2}\Delta\eta^2\right). \tag{6}$$

Consistent with the small perturbation approach, the natural logarithm can be written as a Taylor series. Discarding the higher order terms yields second order accuracy:

$$\frac{\Delta V}{V_\circ} \approx -C_\circ\Delta\eta \qquad V_\circ \neq 0. \tag{7}$$

Equation (7) relates the difference in the velocity between two streamlines to the normal distance between them. The *inviscid* velocity in equation (7) can be replaced with the *inviscid* Mach number by assuming a zero temperature gradient normal to the surface. The *inviscid* Mach number is computed from the surface pressure coefficient using isentropic relations. The surface normal perturbation can now be solved for:

$$\Delta\eta_\circ \approx -\frac{\Delta M}{M_\circ}\frac{1}{C_\circ}. \tag{8}$$

Equation (8) has two singularities; $M_\circ = 0$, and $C_\circ = 0$. The stagnation point is where $M_\circ = 0$, and is avoided implicitly during the design procedure as discussed below. The denominator is modified to avoid zero curvature. Lastly a scaling coefficient is added to control the design procedure and maintain numerical stability. The surface normal perturbation relation is thus;

$$\Delta\eta_\circ = -\sigma\left(\frac{\Delta M}{M_\circ}\right)\frac{1}{1+\mid C_\circ \mid} \tag{9}$$

where σ is the scaling coefficient, and is generally less than 0.40.

Surface Design Procedure

The steps used to design an airfoil section using equation (9) are now presented. Figure 3 shows a sketch of an airfoil section leading edge with both the stagnation streamline and stagnation point shown. The stagnation point serves as the delimiter between the upper and lower surfaces of the airfoil. This is in contrast to many design methods which begin at the geometric leading edge point. The airfoil is parameterized by arclength, with the stagnation point as the origin. The curvature for a given surface is defined as:

$$C(s) = \frac{x_s z_{ss} - z_s x_{ss}}{\left(x_s{}^2 + z_s{}^2\right)^{3/2}} \tag{10}$$

where the subscripts denote differentiation with respect to arclength. This formulation avoids singularities in the leading edge which can occur if the curvature is parameterized by x.

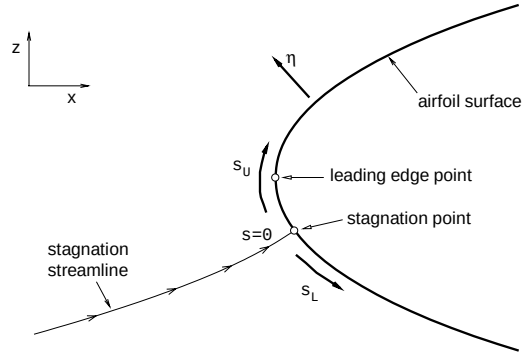

Figure 3. Leading edge region of an airfoil section.

The next step in the design process is to compute the perturbation of the surface normals along the airfoil. It is important to note that the stagnation point is treated as a fixed point during this step, avoiding the singularity of $M_\circ = 0$ in equation (9). At each point along the airfoil the surface point is moved *along* the surface normal by the amount $\Delta\eta_\circ$ computed using equation (9). This process is sketched in Figure 4 for point i along the surface. This

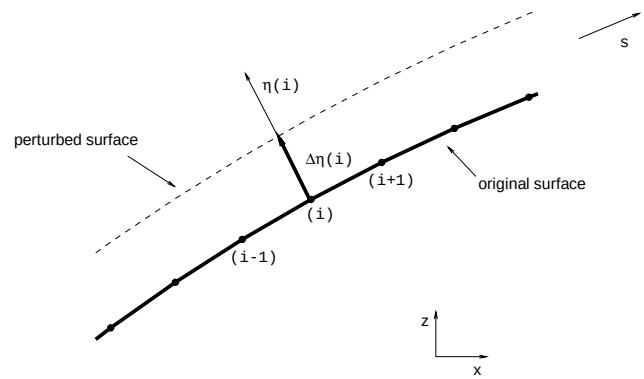

Figure 4. Perturbation of surface geometry along local surface normal.

method allows both the x and z coordinates to move, with the upper and lower surfaces of the airfoil generally rotating about the *fixed* stagnation point. The leading edge point generally moves, and a search is performed to find the leading edge point of the *new* airfoil. It should also be noted that the upper and lower surface trailing edge points are allowed to move independently during the design. This typically al-

lows a blunt trailing edge to develop, which may not be desirable for all design cases. If a closed trailing edge is desired, the upper and lower surfaces of the new airfoil are rotated about the new leading edge point to close the trailing edge.

The ability of the design method to move both the x and z coordinates allows the chord length to vary during a design if desired. For the current research however, the chord length is conserved. The new airfoil coordinates are splined versus the original airfoil arclength distribution to maintain a uniform arclength distribution during the design. The final step is the explicit smoothing of the new surface coordinates. Typically one smoothing pass is used per design cycle using the existing smoothing method in CDISC [3].

Transient Leading Edge Treatment

Experience with the SC2D design method has demonstrated that the leading edge region can still be problematic during the *early* design cycles. To address this "start-up" problem, a *transient* polynomial patching technique was developed. During the early design cycles, a 6th order polynomial is fitted to the leading edge region. This typically replaces only the first 0.5 - 1.0% of the airfoil. As the lift coefficient nears convergence this patch is removed from the design procedure, allowing the airfoil to develop in a non-constrained manner.

Flow Solver

The flow solver used for the Euler and Navier-Stokes simulations is TLNS3D-MB. The code solves the time-dependent, three-dimensional, thin-layer compressible Navier-Stokes equations on block-structured, body-fitted grids. The equations are discretized in a central difference finite volume formulation, and integrated using an explicit second-order accurate Runge-Kutta time-stepping scheme. Multi grid, grid sequencing, and local time stepping techniques are used to accelerate the convergence to steady state. Additional details of the code are found in Reference 9. The adequacy of the code for examining the low-speed flows in the current study is presented in Reference 10.

Initial and Target Airfoil Sections

The airfoil sections used to develop the various test cases for the present research are shown in Figure 5. The NACA 0012 airfoil section was used to formulate the initial converged flow field solutions for the various test cases. The remaining airfoil sections were used to generate converged flow field solutions which provide the "target" pressure distributions for the design test cases, which will be discussed below.

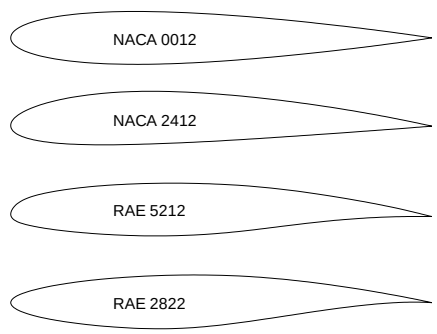

Figure 5. Initial and target airfoil sections.

Results

The accuracy and efficiency of the new SC2D design method will be demonstrated with several two-dimensional and three-dimensional test cases. The Euler and Navier-Stokes design cases were performed on a Cray C-90. The computational times for the target solutions presented below are based on the lift coefficient converging to four decimal places. The panel method results were run on an SGI Octane with an R12000 processor. For this single test case the SC2D design method was *not* run within the CDISC design method.

Inviscid Airfoil Design

The first test case is an inviscid airfoil design for $M_\infty = 0.30$ and $\alpha = 4.00°$. The target airfoil is the RAE 5212 which was chosen due to its aft camber and non-parametric nose shape. Figure 6 examines the influence of grid refinement on the RAE 5212 surface pressure distribution. The grid dimensions such as 289×33 represent the number of grid points in the stream wise and normal directions, respectively, of the C-grid topology. The results for both grids are nearly identical, and the fine grid was used for this test case.

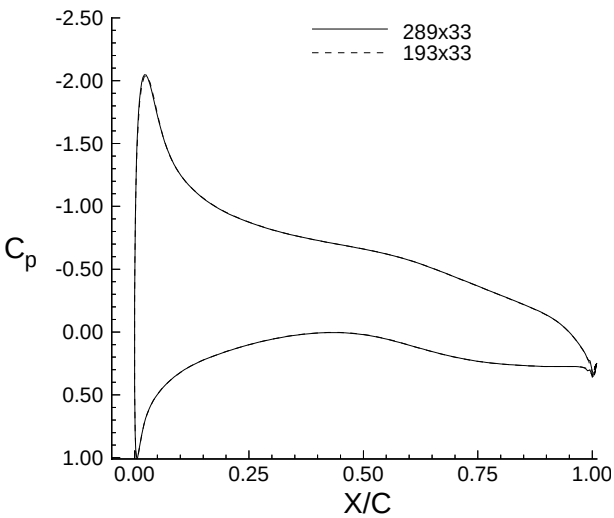

Figure 6. Influence of grid refinement on the RAE 5212 airfoil, inviscid solution ($M_\infty = 0.30, \alpha = 4.00°$).

The results of this design test case are presented in Figure 7 where the initial and target results are shown. The z airfoil coordinates are plotted on an expanded scale for clarity. The SC2D design method has done an excellent job of replicating the target pressure distribution in only 25 design cycles. The maximum difference between the target and design pressure distributions is less than $\pm$ 0.005 over the *entire* airfoil. The design converged rapidly in a monotonic fashion, with the lift coefficient converging to within 98% of the final value after only 12 design cycles. At this point, the transient leading edge patch was removed, and the design continued with *no* geometrical constraints. The 25 design cycles required approximately 4.5 minutes of CPU time, while the target solution required approximately 2.0 minutes. This is quite efficient since the design lift coefficient converged to 98% of the target value in the same amount of time required to perform the baseline analysis of the target airfoil.

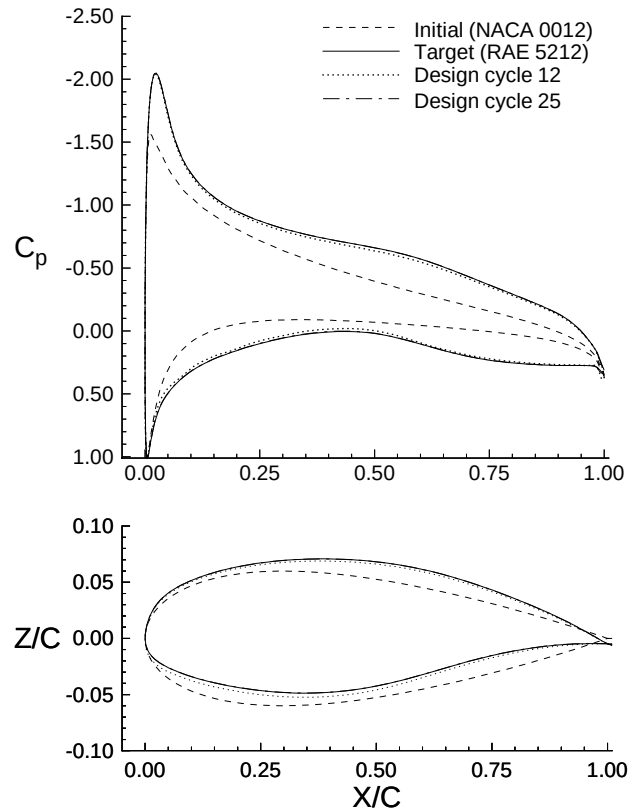

Figure 7. Inviscid airfoil design results ($M_\infty = 0.30, \alpha = 4.00°$).

Viscous Airfoil Design

A viscous airfoil design case was next examined for: $M_\infty = 0.30$, $Re = 2.0 \times 10^6$, $\alpha = 6.00°$. The target airfoil is the NACA 2412, with the flow assumed to be fully turbulent, and attached. The one-equation Spalart-Allmaras turbulence model was used. The grid dimensions for this test case were 289×49, with the y^+ value for the first grid point off of the surface being approximately 1.0.

Figure 8 compares the results of this test case to the initial and target values. The SC2D method has again provided accurate results in

just 25 design cycles. The lift coefficient converged monotonically to almost 99% of the final value in just 12 design cycles, which would be quite adequate for most design problems. This design case required approximately 6.0 minutes of CPU time. This is again efficient, since the target solution required approximately 3.0 minutes of CPU time. Except for the increased flow solver computational time, the viscous effects did not alter the stability of the SC2D design method.

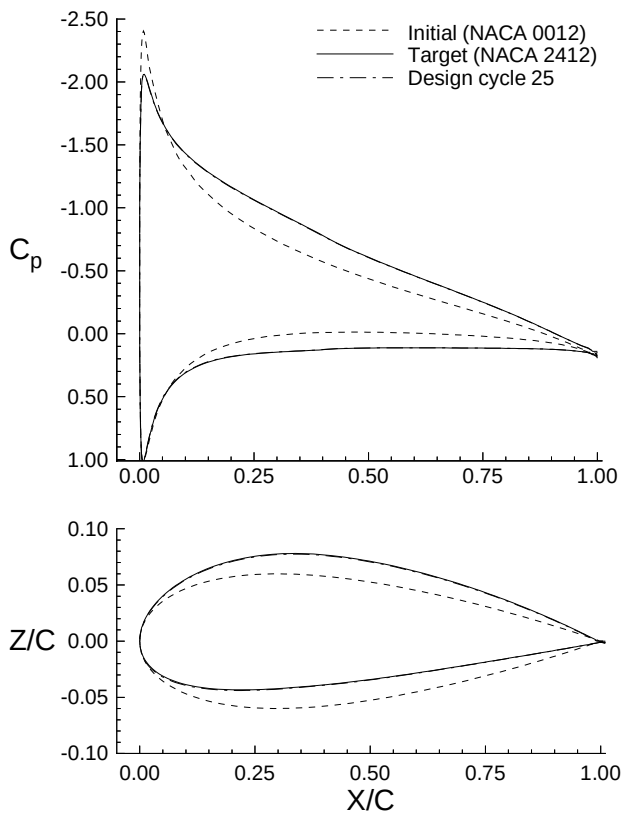

Figure 8. Viscous airfoil design results ($M_\infty = 0.30$, $Re = 2.0 \times 10^6$, $\alpha = 6.00°$).

High-Lift Flap Design

The SC2D design method was initially developed using a two-dimensional, constant strength source-doublet panel method [11] as the flow solver. Since panel methods still play an important role in aerodynamic design methods, a simple high-lift design example was formulated. Figure 9 shows the high-lift configuration which was adapted from Reference 12. The flap is deflected 20.0° and the chord length is 20% of the stowed airfoil chord. It should be noted that the flap gap and overlap with respect to the main element were arbitrarily set.

Figure 9. Simple two-dimensional high-lift configuration.

The objective of this design case was to design the *entire* flap geometry. It must be realized that an aircraft designer cannot typically alter the entire flap, as portions are constrained by the cruise wing configuration. Nevertheless, this test case will further demonstrate the flexibility of the new design method. The angle-of-attack for the test case was 0.00°, and a free stream Mach number of 0.20 was used in SC2D. The initial flap geometry was the NACA 0012, while the target flap was the RAE 5212.

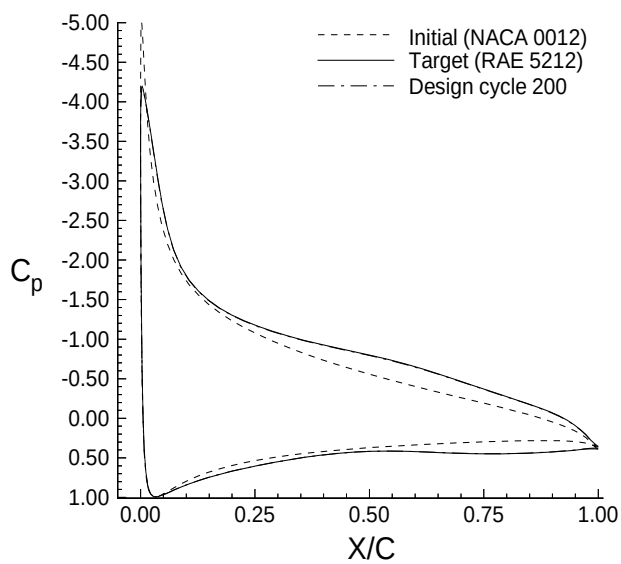

Figure 10. Incompressible high-lift flap design results ($\alpha = 0.00°$).

The results of this test case are shown in Figure 10, where they are plotted in the unrotated reference frame. The new design method has once again provided accurate results. This is a challenging test case not only because of the strong coupling between the flap and main element, but also because the stagnation point is

located considerably aft of the leading edge on the lower surface. This case required 200 design cycles to converge which is attributed to the explicit Kutta condition used in the panel method, which required a lower value of σ (0.25) to avoid kinks in the trailing edge region. As a result of this reduced σ value, the transient leading edge patch was *not* required. The final flap geometry is compared to the target geometry in Figure 11, where the agreement is observed to be excellent. Even though more design cycles were required, this test case used only 2.0 minutes of CPU time. This suggests that the SC2D design method may be a useful tool for designing or improving high-lift systems. Further research is being conducted to explore this possibility.

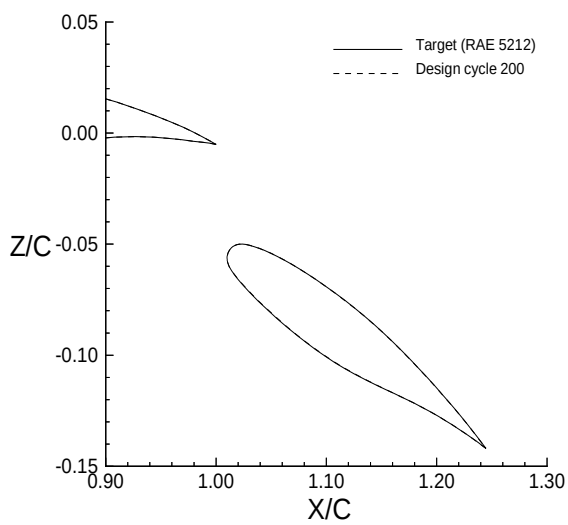

Figure 11. Comparison of design and target flap geometries.

Inviscid Transonic Airfoil Design

The final two-dimensional test case presented is an inviscid transonic design, with the RAE 2822 as the target airfoil. The test case was formulated to produce a shock wave free flow field, since the terms necessary to handle supersonic flow [3] were not added to equation (9). The flow conditions are $M_\infty = 0.725$ and $\alpha = 0.00°$, which generates a lift coefficient of 0.382. The grid used for this test case was similar to the previous Euler case.

Figure 12 compares the design results to the initial and target values. The SC2D method has again done an excellent job of replicating the target pressure distribution. The design airfoil geometry is identical to within plotting accuracy of the target airfoil, which is quite encouraging. This case however did require nearly 50 design cycles to converge, which is attributed to the small sonic region present on the upper surface of the target airfoil. In such a region a slope based term [3] would be more appropriate than equation (9), and could easily be added.

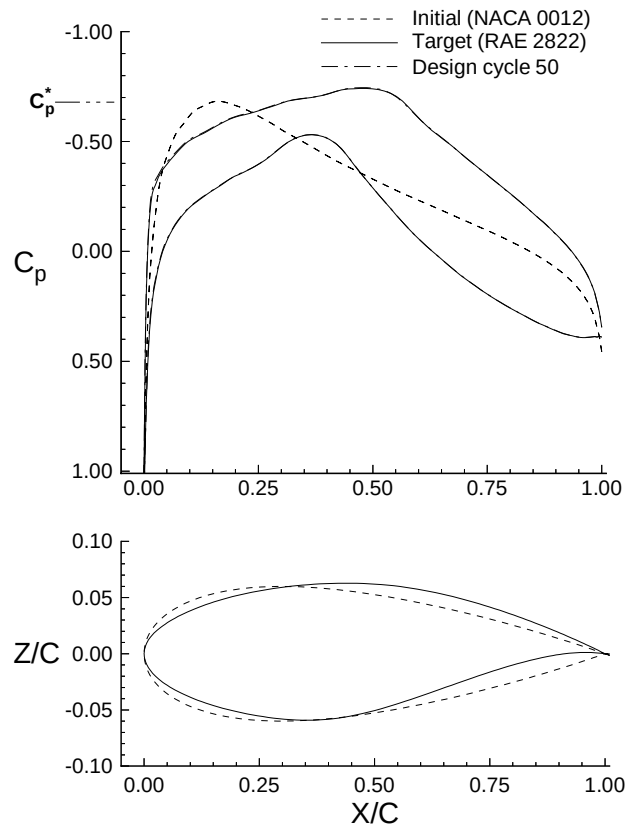

Figure 12. Inviscid transonic airfoil design results ($M_\infty = 0.725$, $\alpha = 0.00°$).

This design case required 5.0 minutes of CPU time, whereas the target solution required approximately 1.0 minute. This is still considered an efficient design case, particularly when the accuracy of the results is considered. This test case indicates that the SC2D method may be a viable tool for designing transonic airfoils, including advanced leading edge concepts [13].

Inviscid Wing Design

The final test case is a three-dimensional inviscid wing design. The wing has an aspect-ratio of 7.0, taper ratio of 0.70, leading edge sweep angle of 25°, and no twist. The initial wing is comprised of the NACA 0012 airfoil section. The target wing is generated by replacing the root section with the RAE 5212 airfoil as shown in Figure 13. The flow conditions for the design case are: $M_\infty = 0.20$, $\alpha = 6.00°$. The C-O grids used to represent the wings are based on the grid refinement studies presented in reference [10]. The grid has dimensions of $193 \times 33 \times 49$ in the stream wise, normal, and span wise directions, respectively.

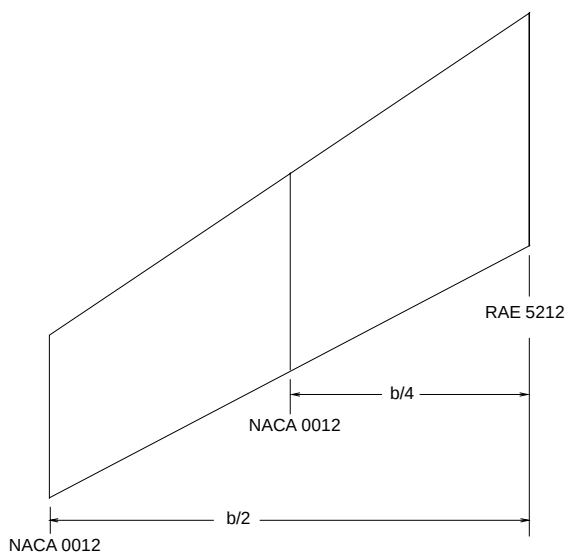

Figure 13. Planform view of target wing.

The results of the wing root section design, $2y/b = 0.00$, are presented in Figure 14. The SC2D method has again performed well, converging to the target pressure distribution in only 25 design cycles, although the geometrical changes are significant. The lift coefficient again converged monotonically, and reached 99% of the final value after only 12 design cycles. It is important to note that this was the only design station on the wing, and that existing options in CDISC were used to interpolate the design changes between this station and the fixed outer portion of the wing at $2y/b = 0.50$. This design case required 40.0 CPU minutes, while the target solution required 15.0 minutes. This is again considered to be efficient since the design converged to 99% of the target lift coefficient in almost the amount of time required to perform the baseline analysis of the target geometry. In addition, the new design method behaved in a manner consistent with the previous low-speed two-dimensional design cases discussed above.

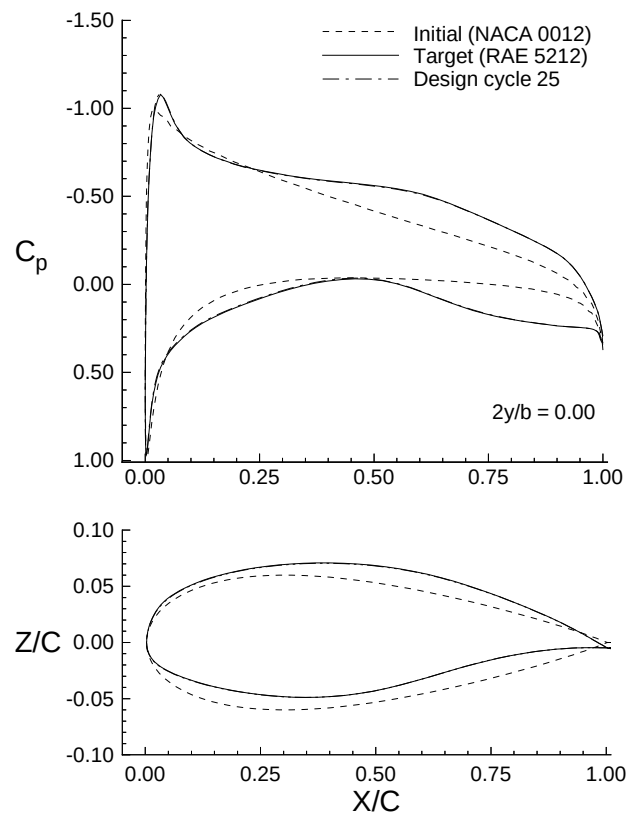

Figure 14. Inviscid wing design results ($M_\infty = 0.20, \alpha = 6.00°$).

Conclusions

A new streamline curvature design method was developed which is based on a new method of modeling the streamline curvature variation normal to the surface. The surface coordinates are allowed to move normal to the surface, and the method is valid in the leading edge region of airfoils. The new design method was incorporated into the CDISC design method. Two-dimensional and three-dimensional test cases were presented which demonstrated the validity of the new design method.

The new SC2D design method was shown to accurately replicate the target surface pressure distributions of the design test cases. The resulting design geometries were found to be within plotting accuracy of the target geometries, and were obtained with *no* geometrical constraints. The performance of the new design method, particularly in the leading edge region, suggests that the method may be a viable tool for designing both low-speed and transonic leading edges.

The computational efficiency of the new SC2D design method has been demonstrated. The design cases were found to converge in a monotonic fashion, with the lift coefficient converging to at least 98% of the target value in a similar amount of time required to perform the baseline analysis of the target configuration. This is quite encouraging given that most of the design cases required significant geometrical changes.

Acknowledgments

The author is grateful to Richard L. Campbell of the NASA Langley Research Center for his many insightful discussions regarding CDISC, and his critical review of the research. The author would like to thank the National Research Council for their initial support of this research. The Euler and Navier-Stokes computations were performed on the Cray C-90 at the Numerical Aerodynamic Simulation facility at the NASA Ames Research Center.

References

[1]Mavriplis, D.; and Pirzadeh, S.: *Large Scale Parallel Unstructured Mesh Computations for a 3-D High-Lift Analysis.* AIAA Paper 99-0537, Jan. 1999.

[2]Milholen, W.E., II; Chokani, N.; and McGhee, R.J.:Development of Semispan Model Test Techniques. *Journal of Aircraft*, Vol. 33, No. 6, Nov. 1996, pp.1115-1122.

[3]Campbell, R.L: *Efficient Viscous Design of Realistic Aircraft Configurations.* AIAA Paper 98-2539, June 1998.

[4]Yu, N.J.; and Campbell, R.L.: *Transonic Airfoil and Wing Design Using Navier-Stokes Codes.* AIAA Paper 92-2651, June 1992.

[5]Green, B.E.: *An Approach to the Constrained Design of Natural Laminar Flow Airfoils.* NASA CP-201686, 1997.

[6]Besnard, E.; Schmitz, A.; Boscher, E.; Garcia, N; and Cebeci, T.: *Two-Dimensional Aircraft High Lift System Design and Optimization.* AIAA Paper 98-0123, Jan., 1998.

[7]Hartwich, P.M.; and Agrawal, S.: *Orthonormal Functions for Airfoil and Wing Parameterization.* AIAA Paper 96-2419-CP, June, 1996.

[8]Barger, R.L.; and Brooks, C.W., Jr.: *A Streamline Curvature Method for Design of Supercritical and Subcritical Airfoils.* NASA TN D-7770, Sept. 1974.

[9]Vatsa, V.N.; Sanetrik, M.D.; and Parlette, E.B.: *Development of a Flexible and Efficient Multigrid-Based Multiblock Flow Solver.* AIAA Paper 93-0677, Jan., 1993.

[10]Milholen, W.E., II; Chokani, N.; and Al-Saadi, J.A.: Performance of Three-Dimensional Compressible Navier-Stokes Codes at Low Mach Numbers. *AIAA Journal*, Vol. 34, No. 7, July 1996, pp. 1356-1362.

[11]Katz, J.; and Plotkin, A.: *Low-Speed Aerodynamics: From Wing Theory to Panel Methods.* McGraw-Hill, New York, 1991.

[12]Omar, E.; Zierten, T.; Hahn, M.; Szpiro, E.; and Mahal, A.: *Two-Dimensional Wind-Tunnel Tests of a NASA Supercritical Airfoil with Various High-Lift Systems, Volume II - Test Data.* NASA CR-2215, 1977.

[13]Carson, H.W.; McElroy, M.O.; Lessard, W.B.; and McCullers, L.A.: *Improved Method for Prediction of Attainable Wing Leading-Edge Thrust.* NASA TP-3667, 1996.